Eastern European Version

User´s Manual

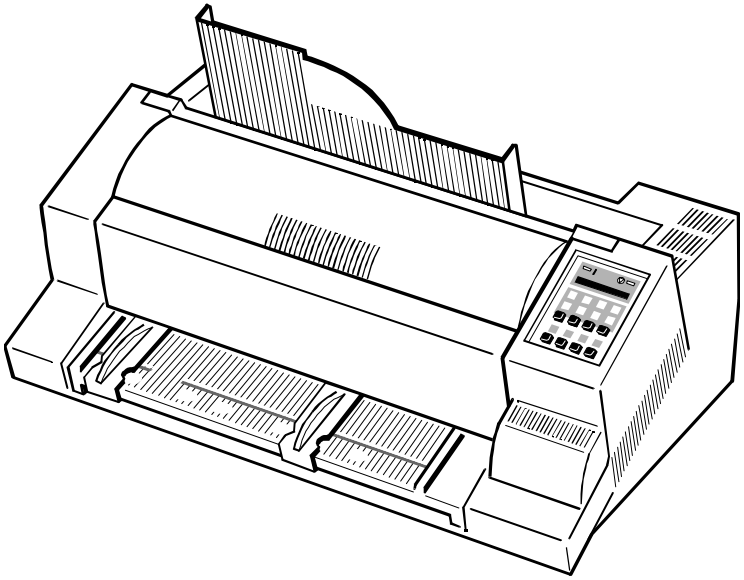

Acknowledgements

EPSON is a Trademark of Seiko Epson Corporation.

IBM is a Trademark of International Business Machines Corporation.

Proprinter is a Trademark of International Business Machines Corporation.

A Publication of PSi Printer Systems international GmbH
Eiserfelder Straße 316

57080 Siegen · Germany

Pub. No. 5112 991 13254 Juli 1999
Order No. 8708 240 00020

Great care has been taken to ensure that the information in this handbook is accurate and complete. However, should any errors or omissions be discovered or should any user wish to make suggestions for improving this handbook, please feel encouraged to send us the relevant details.

The contents of this manual are subject to change without notice.

Copyright © by **PSi Printer Systems international**.
All rights strictly reserved. Reproduction or issue to third parties in any form is not permitted without written authorization from the publisher.

Safety Regulations

The printer **PP 405** fulfils the safety regulations according to UL 1950 and VDE (IEC 950) and CNA/CSA C22.2 / No. 950 for computer systems.

The mains cable must be connected to a ground protected wall-socket. The selected voltage of the printer needs to agree with the local voltage.

The power plug must be easily accessible at any time so that it can be disconnected immediately in case of danger or for maintenance purposes..
Comme le câble de secteur sert de dipositif d'arrêt-urgence, sa connexion à l'imprimante doit être tout le temps accessible.

Before installing the printer, check the surrounding conditions in which the printer will be placed (see next page, Operating Environment and chapter 1).

During a thunderstorm you should never attempt to connect or disconnect any data transfer cables.

The power supply should only be opened and checked by authorized personnel. Repairs and maintenance beyond the descriptions of chapter **4 Maintenance** may only be attempted by authorized personnel as well. Repairs done inappropriately may cause damage and severe danger for the user.

There is a warning symbol to draw the user's attention to possible injuries:

This symbol is visible when the top cover has been opened. It indicates that the print head is extremely hot after long periods of printing.
Ce signal de danger se présente quand le cache supérieur de l'imprimante soit retiré pour indiquer que la tête d'impression peut être extrèmement chaude après imprimer très longtemps.

Electromagnetic Compatibility

We certify that the equipment at issue,

Type: Printer **PP 405**

corresponds to the law regulations ruling electromagnetic compatibility of appliances (89/336/EWG) and, therefore, fulfils the requirements for conformity marking with the CE-sign.

This equipment has been tested and found to comply with the limits for a Class B digital device, pursuant to Part 15 of the FCC rules. These limits are designed to provide reasonable protection against harmful interference in a residential installation. This equipment generates, uses, and can radiate radio frequency energy and, if not installed and used in accordance with the instruction manual, may cause interference to radio communications.

However, there is no guarantee that interference will not occur in a particular installation. If this equipment does cause harmful interference to radio or television reception, it can be determined by turning the equipment off and on. The user is encouraged to try to correct the interference by one or more of the following measures:

– Reorient or relocate the receiving antenna.
– Increase the separation between the equipment and receiver.
– Connect the equipment to an outlet on a circuit different from the circuit to which the receiver is connected.
– Consult the dealer or an experienced radio/TV technician for help.

Shielded interface cables should be used with this unit to ensure compliance with Class B limits.

Changes and modifications not explicitly allowed by the equipment's manufacturer could void the user's authority to operate the equipment.
Changes et modifications pas expressément approuvés par le producteur peuvent dévaluer l'autorité d'opérer l'équipement.

Operating Environment

Avoid installing the printer where it is exposed to moisture or heat (eg. direct sun light).

–	Temperature:	+ 10°C to + 35°C (+50°F to +95°F)
–	Humidity:	20% to 80%
–	Humidity with Automatic Sheet Feeder (ASF):	30% to 70%

Slots and openings in the printer's housing are provided for ventilation. Always ensure that these openings are not obstructed.

Also ensure that the cables at the rear of the printer do not interfere with the output paper path.

When processing fanfold paper always place the printer with its front edge slightly off the edge of the table.

Table of Contents

Preface XI
About this manual XI

1.Getting started 1-1
1.1 Unpacking 1-1
- A First Look at the Printer 1-2
- Site Consierations 1-3
- Environment Conditions 1-3
- Power Requiremens 1-3
- Transport Lock 1-4
- Repacking information 1-4

1.2 Installing the Interface Module 1-5

1.3 The Power Supply 1-6
- Main Input Voltage Selection 1-6

1.4 Power ON / OFF Switch 1-7

1.5 Installing the Ribbon Cassette 1-8
1.5.1 Changing the Ribbon Cassette 1-12

1.6 Selection of Operator Panel Language 1-13

1.7 Tractor 1-14
- Inserting Fanfold Paper for the First Time 1-14

1.8 Manual Sheet Insertion 1-17

1.9 Selection of The Paper Source 1-19

1.10 Test-Prints 1-20

1.11 Connecting to a Computer 1-24
- Parallel/Serial Interface 1-24

1.12 Emulation Selection 1-25

2. Printer Operation 2-1

2.1 Control Panel 2-1

2.2 Function Keys 2-2
2.2.1 Short Description of Keys 2-2
- in the printer operation state READY or BUSY 2-2
- in the printer operation state LOCAL 2-2
2.2.2 Detail Description of Keys 2-3
- in the printer operation state READY or BUSY 2-3
- Quick Settings 2-3
- Top Row Keys 2-4
- Lower Row Keys 2-4
2.2.3 Meaning of the Keys in the LOCAL Mode 2-7
- Lower Row Keys 2-7

2.3 Menu Mode 2-8
2.3.1 To Activate the Menu 2-9
2.3.2 To confirm Selection 2-10
2.3.3 How to Save Settings 2-11
2.3.4 Quick Settings 2-12

2.4 Status and Error Messages 2-13

3. Configuring the Printer 3-1

3.1 What means Configuration 3-1

3.2 Standard Configuration 3-3

3.3 Explanation of the Printout 3-4

3.4 Explanation of Individual Menu Items 3-5
Main Functions 3-5
- MACRO SELECT 3-5
- CHANGE MACRO 3-5
- INSTALLATION 3-5
- SAVE 3-5
- PRINT OUT 3-6

Main Function CHANGE MACRO 3-6
- FONT 3-6
- PRINT QUALITY 3-7
- SUB/SUPER FONT 3-7
- PITCH 3-7
- LINE 3-7
- PAPER LENGTH 3-8
- VERT.POS.ADJ (Vertical Position Adjustment) 3-9
- LEFT MARGIN 3-8
- RIGHT MARGIN 3-10
- TOP MARGIN 3-10
- BOTTOM MARGIN 3-11
- PERFORATION SKIP 3-11
- PAPER SOURCE 3-11
- PAPER EXIT 3-12
- EMULATION 3-12
- CHARACTER SET 3-12
- LINE MODE 3-13
- $$-COMMANDS 3-13
- TEAR OFF MODE 3-13
- PRE-SEPARATION 3-13

Main Function INSTALLATION 3-14
Sub-Function INTERFACE 3-14
- BUFFER 3-14
- WORD LENGTH 3-14
- I/F Type 3-14
- BAUD RATE 3-14
- PARITY BIT 3-14
- PROTOCOL 3-14
- CTS MODE 3-15

Sub-Function ADJUSTMENT 3-15
- AGC POSITION 3-15
- PLATEN GAP 3-16
- AGC ADJUST 3-16
- PAPIER-IN ADJUST 3-16
- CUT V-POS 3-17
- UNI-DIRECT. CMD 3-17
- TRACT.FORM FEED MODE 3-18

Special Menu Items under INSTALLATION 3-18
- LANGUAGE 3-18
- RESTORE SET UP 3-18
- RECALL FACTORY 3-18
- MENU ACCESS 3-19
- SELF TESTS 3-20
- HEX DUMP 3-20

Menu Tree Menu-1

4. Maintenance 4-1
- Preferred Materials 4-1

4.1 Cleaning the Platen and Surrounding Areas 4-1

4.2 Cleaning Procedure 4-3

4.3 User Replaceable Parts 4-4
- Replacement of the Print Head 4-4
  - Print Head Removal 4-4
  - Print Head Installation 4-6
- Replacement of the Platen 4-8
  - To Remove the Platen 4-8
  - To Install the Platen 4-9

5. Trouble Shooting and Diagnostics 5-1
- How to Use this section 5-1

5.1 Power-related Problems 5-2

5.2 Error Messages 5-2

5.3 No Printout 5-5

5.4 Operation-related Problems 5-6

5.5 Print-related Problems 5-7

5.6 Ribbon or Carriage-related Problems 5-9

5.7 Ribbon Problems 5-9

6. Colour Option 6-1
6.1 Install the Colour Option 6-1

6.2 Installing the 4-Colour Ribbon 6-5

7. Technical Data 7-1

Appendices

Appendix A **System Interface Descriptions** A-1
1 Serial Interface RS 232 C A-2
2 Transmission Protocols A-3
3 Parallel Centronics® Interface A-8
4 Shared Operation A-11

Appendix B **Print Samples of Resident Fonts** B-1

Appendix C **Character Set Tables** C-1

Appendix D **Philips GP Quick Reference** - not supported! D-1

Appendix E **IBM ProPrinter Quick Reference** E-1

Appendix F **EPSON LQ 2550 Quick Reference** F-1

Appendix G **Barcode Quick Reference** G-1

Appendix H **Information for the System Manager** H-1

Preface

About this Manual

This manual covers the printer in combination with an interface module (Personality Module).

The Personality Module (PM) is an integral part of the printer, and the type of PM used significantly influences the behaviour or operation of the printer.

The structure of this manual is such that the operator is led step-by-step through the various procedures. It starts with the unpacking and setting-up, moves on to detailed instructions for operating the printer and ends with the mounting of options.

The manual is divided into the following chapters:

1. **Getting Started**
   This chapter covers the unpacking and setting-up of the printer and the installation of the PM (Personality Module) and ribbon cassette. By the end of this chapter the printer should be fully functional and tested in its primary form. It is not yet connected to the host computer system and no options are mounted.

2. **Operating the Printer**
   This chapter discusses in great detail the operation of the operator panel, all menu functions, and the general operation of the menu. General status messages (e.g. COVER OPEN) are also described.

3. **Configuring the Printer**
   This chapter explains how to configure the printer so that it can communicate with the corresponding system environment. Then this chapter thoroughly describes the printer's operating controls. In the last part you will find explanations of individual menu items.

4. **Maintenance**
   shows how to clean the printer and how to replace the platen and the print head.

5. **Trouble Shooting and Diagnostics**
   suggests how to identify and correct simple problems.

6. **Options**
   This is a brief description of all available options. Supplements enclosed in the packaging of options may be inserted here.

7. **Technical Data**
   All technical details or data about the printer can be found here.

Appendix

A. **Interface Description**
   This chapter gives hints about possibilities to connect the printer to the various computer systems and explains particularities depending on the version of the operating system. Additionally, cable connection is illustrated.

B. **Print Samples of Resident Fonts**

C. **Character Set Table**
   All printer supported character sets are listed in this chapter.

D. **Control Codes**
   Quick reference for Philips General Printer (GP) Emulation

E. Control Codes

Quick reference for IBM Proprinter and IBM Proprinter AGM (4207, 4208 XL 24) Emulation.

F. Control Codes

Quick reference for EPSOM LQ 2550 Emulation.

F. Control Codes

Quick reference for Barcode programming.

G. Verschiedenes / Miscellaneous

- Bestellnummern / Ordernumbers
- System Manager Information

Conventions Used in this Guide

The following conventions are used:

Bold	Headlines and important information.
Note:	Contains special advice to facilitate handling.
Caution:	Contains important information to prevent damage of the equipment.
[ENTER]	Key functions are always depicted in brackets or you will find the symbol of the key e.g .

1. Getting Started

1.1 Unpacking

Check each item against the check list detailed below. Contact your delivery agent immediately if any item is missing or damaged.

The printer package should contain the following:

- Top cover (1)
- Printer (3)
- Power cord (7)
- Ribbon cassette (2)
- Folder for the User´s Manual (4)

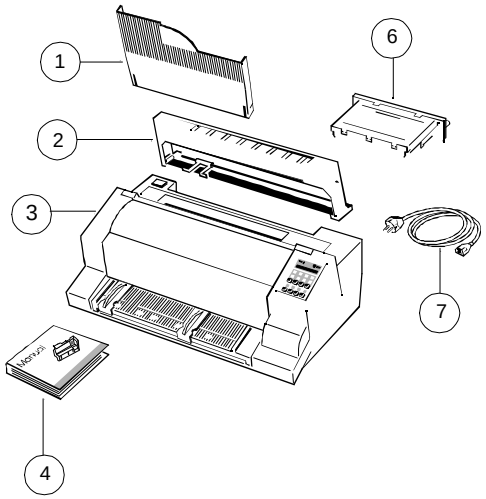

A separate box contains the Personality Module (16) and the chapters 1 - 6 and Appendix A - G of the User´s Manual. Please file the loosen pages into the folder.

Caution: Do not connect to the mains until the mains voltage selection has been checked and the PM is installed.

Note: Save all packing material and boxes for future transportation of the printer.

The printer drivers for Windows® are available on Internet Address: **http://www.psi-si.de**

A First Look at the Printer

Before installing the printer, spend some time familiarizing yourself with the printer.

- Top Cover (1)
- Ribbon Cassette (2)
- Printer (3)
- Front Cover (4)
- Manual Front Insertion Guide (5)
- Control Panel (6)
- Tractor for Continuous Paper (7)
- Output Stacker (8)
- Power Switch (9)
- Power Cord Socket (10)
- Tear Off Edge (11)
- Personality Module (PM) (12)

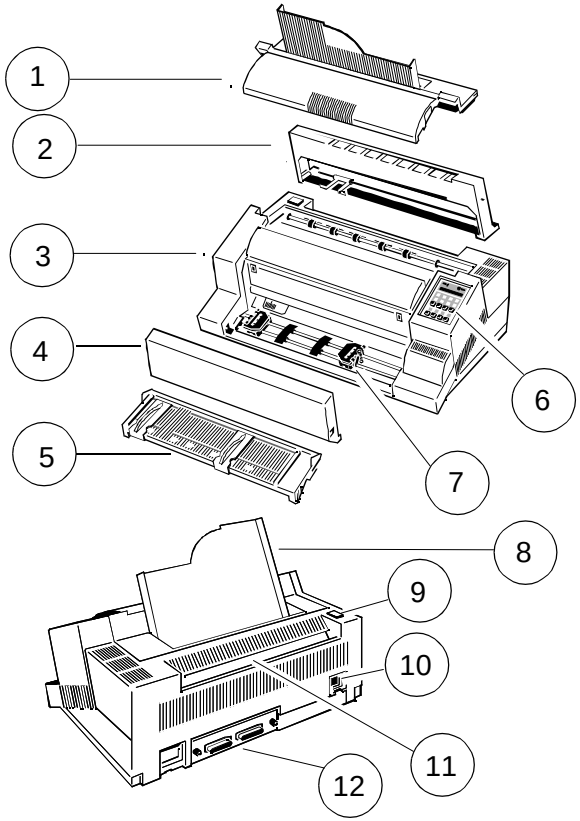

Site Considerations

Environment Conditions

- Install the printer in an area away from any heat source, air conditioner or strong drafts.

- Avoid installing the printer in a dusty or humid environment.

Work Location

- Place the printer on the stand or a flat, solid level area such as a desk.

- Slots and openings in the printer's housing are provided for ventilation; always ensure that these openings are not obstructed.

- When processing fanfold paper always place the printer with its front edge slightly off the edge of the table.

- Also ensure that the cables at the rear of the printer do not interfere with the output paper path.

Power Requirements

- No special wiring is required. A typical office wall outlet is sufficient.

- Do not plug into the same wall outlet other equipment besides the printer such as coffee machines, copy machines or air conditioners.

Transport Lock

You will find a red shipping tab under the top cover (2).

Grasp the top cover (2) on the left and right, lift it and remove the transport locking clip (12) from the print head drive belt.

Re-packing Information

To ensure maximum protection when transporting the printer, always

- Remove any installed paper handling option.
- Remove the output stacker and the mains cable.
- Remove the ribbon cassette.
- Reposition the transport locking clip.
- Pack the printer in its original packing material and ship in its original box.

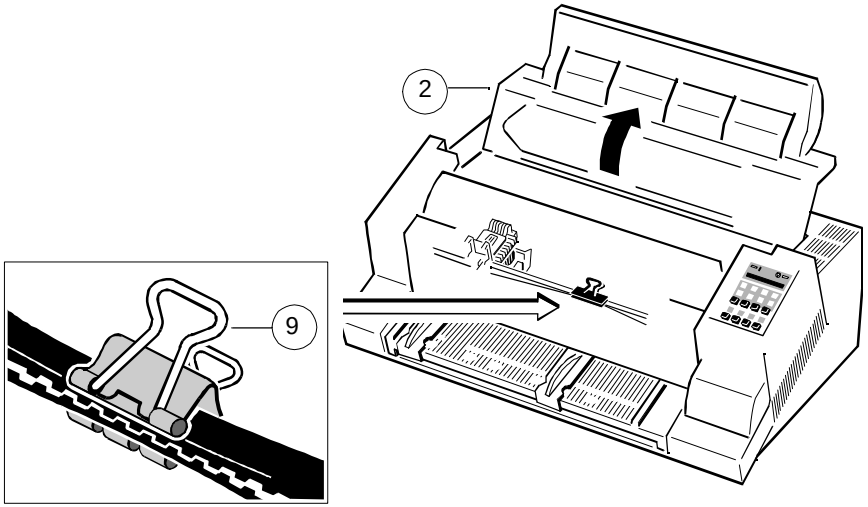

1.2 Installing the Personality Module

The printer functions only in combination with an installed interface module, called a Personality Module (PM).

The illustration below shows the standard PM with a serial and parallel interface. For detailed information about your PM, see Chapter 2.

Note - To avoid damage due to electrostatic discharge, do not touch the pins or components of the PM.
- Never attempt to install or remove a PM while the printer is switched ON.

1. Remove the PM (6) from its packaging.
2. Insert the Personality Module (6) with the component side upwards until the connector fully engages. Hand tighten the two lock screws (13).

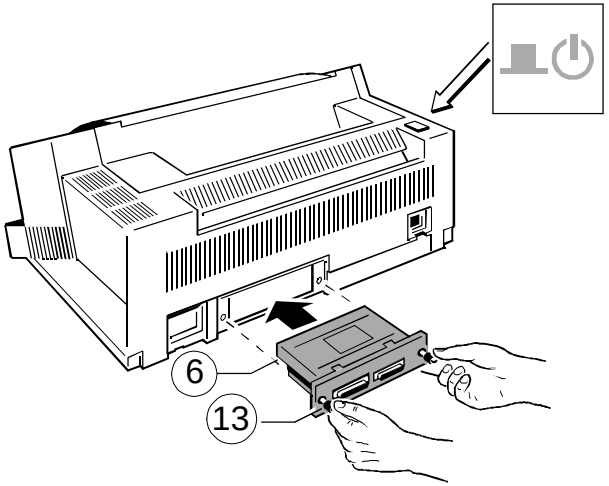

1.3 The Power Supply

Mains Voltage Selection
In general, the mains voltage selection is determined at factory site.

Since an incorrect voltage selection can seriously damage the printer, please pay special attention to the following:

Make sure that the specified voltage on the voltage selector (11) corresponds to your mains voltage:

- either 230 V for 180 to 264 V alternating current
- or 115 V for 90 to 140 V alternating current.

If it is necessary to change the voltage, slide the selector button to the required voltage selection.
Connect the printer to the mains using the power cord (6). First connect the cable to the power cord socket and then to the mains.

Note: As the power cord serves as a safety cut-off, its connection to the printer must be accessible any time.

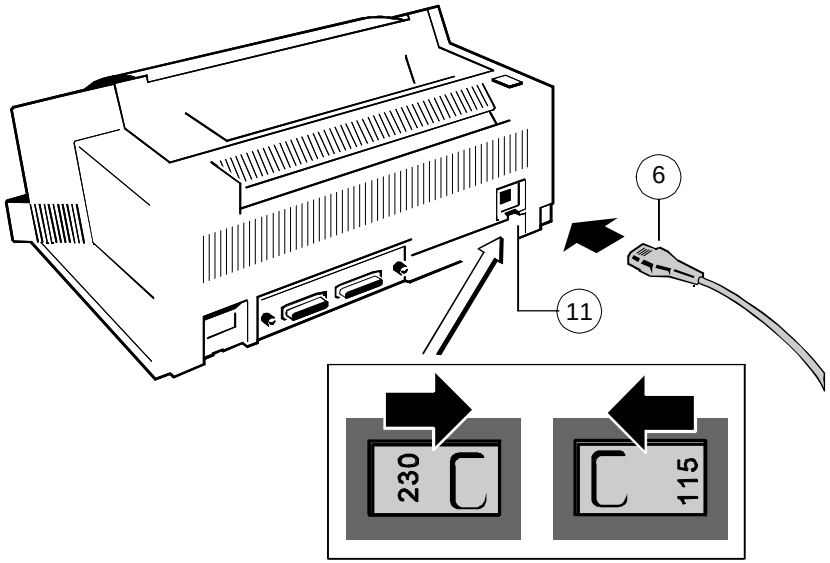

1.4 Power ON/OFF Switch

The power ON/OFF switch (1) turns the printer's power supply ON or OFF.

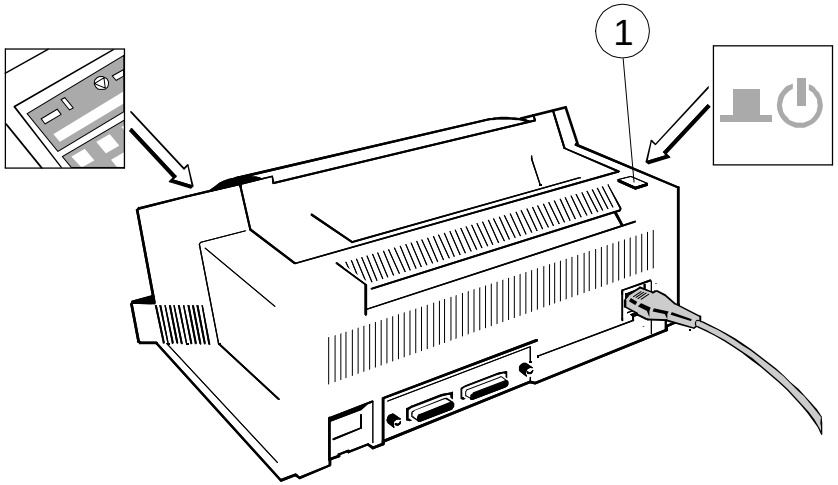

When switched **ON** the printer performs an internal self-test which checks the electronics, the print head carriage movement and the interface. Power ON is indicated by a green LED on the operator panel and shows **TEST....** .

If the message **INSTALL RIBBON** is shown, follow the steps in chapter **1.5 Installing the Black Ribbon Cassette**.

After inserting the ribbon press ▽ to continue. When the internal test has been completed successfully the display shows **READY 4 ELQ** or **BUSY 4 ELQ** in case data has already been transmitted.

Note: If the display shows anything different please refer to chapter **5 Troubleshooting and Diagnostics**.

1.5 Installing the Black Ribbon Cassette

Note: Information about installing the 4-colour-ribbon cassette you will find in chapter **6 Colour option**.

It is recommended to use only original ribbon cassettes (part numbers in **Appendix H**) put out by our company. Using other ribbons will void your warranty.

Caution: Never manually move the print head fully to the right hand stop (you could change the way of the paper output).

Note: If the printer is busy (message **BUSY 4 ELQ**) always press ▽ before opening the top cover.

1. Switch the printer ON at the power switch; Power LED is lit and wait for the message **READY 4 ELQ** or **INSTALL RIBBON**.

2. If the printer is busy (message **BUSY 4 ELQ**) press ▽ .

3. Lift the top cover to gain access to the ribbon cassette mountings. The print head will move to the correct position, aligned with the cut-out in the paper guide plate to facilitate the installation of the ribbon cassette.

4. Remove any excess slack by turning the green knob on the ribbon cassette clockwise. Move the ribbon feed guide to the position indicated on the plastic cover of the cassette.

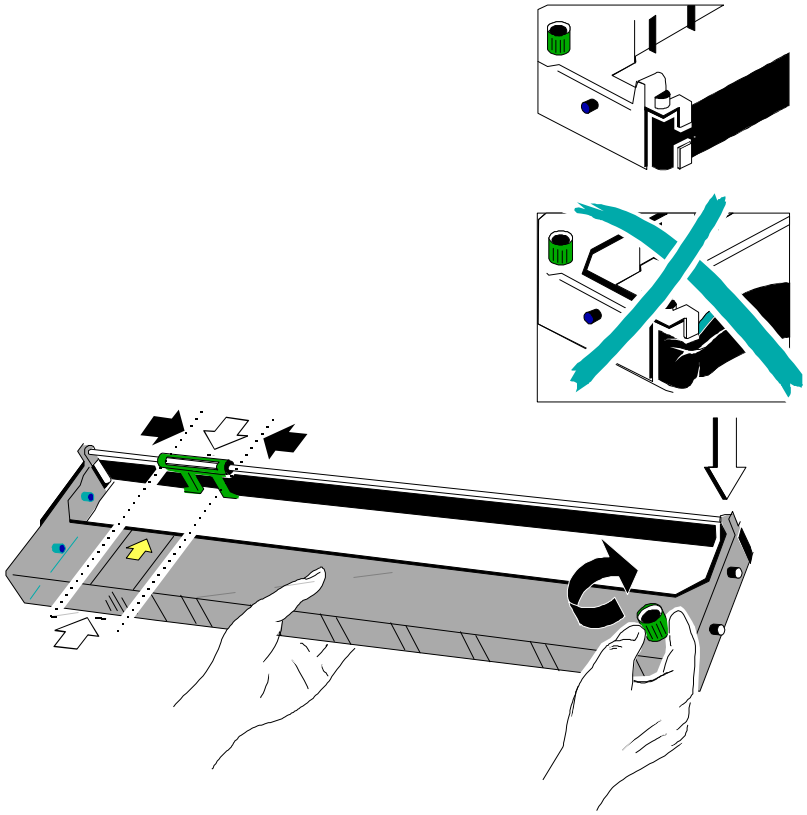

5. Position the lower mounting pin (a) on the guide to the right. Slide the cassette downward. In this position, the green ribbon feed guide touches the green plastic clip.

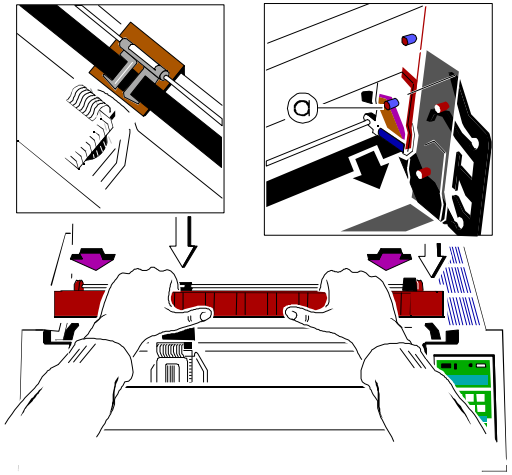

6. Move the cassette toward you until you hear a click on both sides. Swing the ribbon underneath the print head for the final **click**. The audible clicks indicate that the mounting pins have engaged properly.

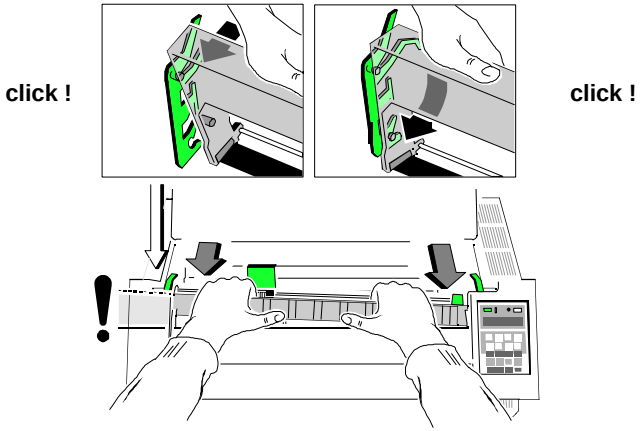

Note When installed correctly the ribbon cassette has a sloping position.

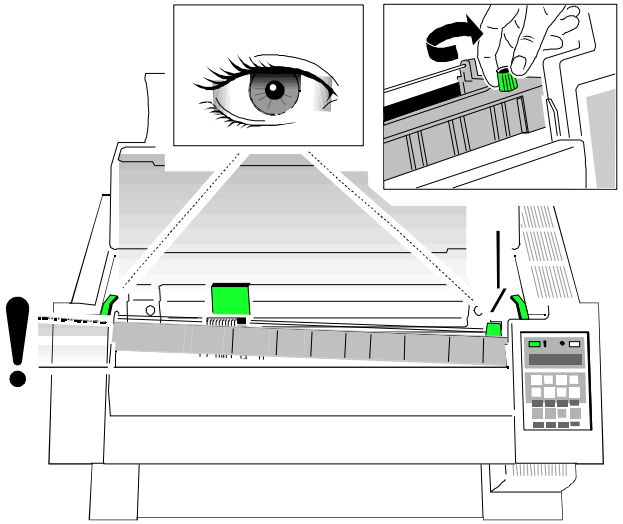

7. Move the print head back and forth to settle the ribbon in the correct position.

8. If necessary remove excess ribbon slack by turning the green knob clockwise.

9. Close the top cover and press [START/STOP] .

1.5.1 Replacing the Ribbon Cassette

Caution: **The print head may be very hot immediately after printing!**

- Close the top cover and switch the printer ON. Lift the top cover after the display shows the message **READY 4 ELQ** to gain access to the ribbon cassette mountings. The print head will move to the correct position, aligned with the cut-out in the paper guide plate to facilitate the installation of the ribbon cassette.
- Now swing the lower part of the ribbon to the back.
  In this way the mounting pins loosen from the lower position.
- Then press the upper part of the ribbon to the back. Die upper mounting pins get free and the ribbon can be taken out.

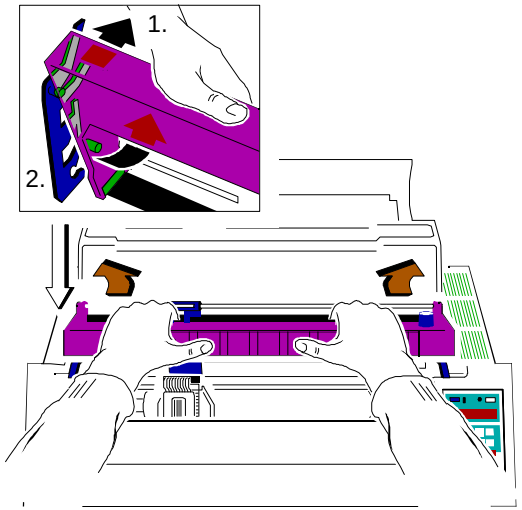

- To install a new ribbon cassette please see **1.5 Installing the ribbon cassette** (see pages before).

1.6 Selection of Operator Panel Language

The printer control panel and LCD display menu is used for the next steps. It is possible to change the language in the printer menu from English to French or German. The following example shows how to change from English to German:

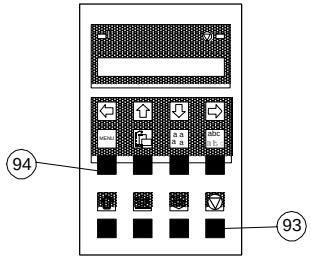

	Key	Display	
1.	Switch the printer on		
2.	(93)	LOCAL	
3.	MENU (94)	MACRO SELECT	→
4.	[⇓] -- [⇓]	INSTALLATION	→
5.	[⇒]	← INTERFACE	→
6.	[⇓] -- [⇓]	← LANGUAGE	→
7.	[⇒]	← ENGLISH	*
8.	[⇓]	← DEUTSCH	
9.	[⇒]	← DEUTSCH	*
10.	[⇐]	← SPRACHE	→
11.	[⇐]	INSTALLATION	→
12.	[⇓]	MENÜ SICHERN	→
13.	[⇒]	← SICHERT	→
		MENÜ SICHERN	→
14.	(93)	BEREIT 4 ELQ	

Note: In chapter **2 Printer Operating** you will find a description of the function keys.

1.7 Tractor

Inserting Fanfold Paper for the First Time

- Ensure that the printer is placed in the depression on the top of the stand (option). If the printer is used without a stand, align the printer with the front edge of the table. The cables at the back of the printer should be tucked into the cable clips in order not to block the paper path.

- Hold the front of the manual insertion guide (4) on both sides, pull upwards against the resistance and remove by pulling forward.

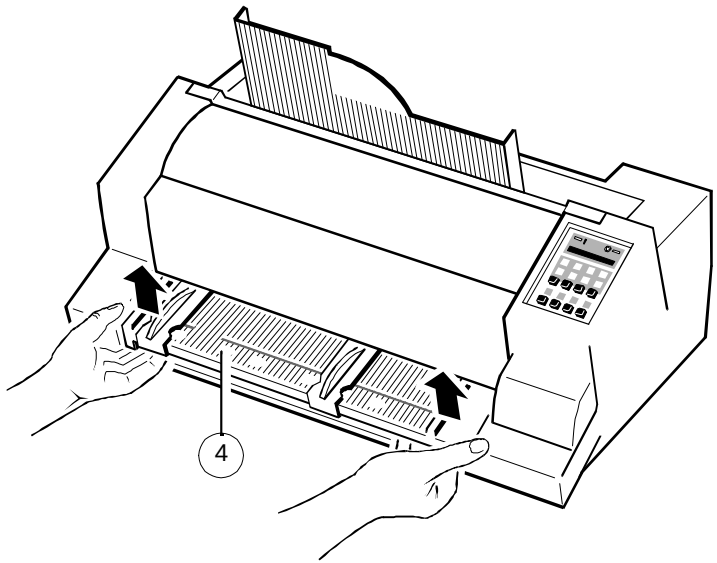

- Pull the green tractor lock levers (12) toward you to release the tractors.
- Lock both green tractor levels
- Roughly adjust the tractors (13) to the paper width, and space out the paper supports (14) evenly.

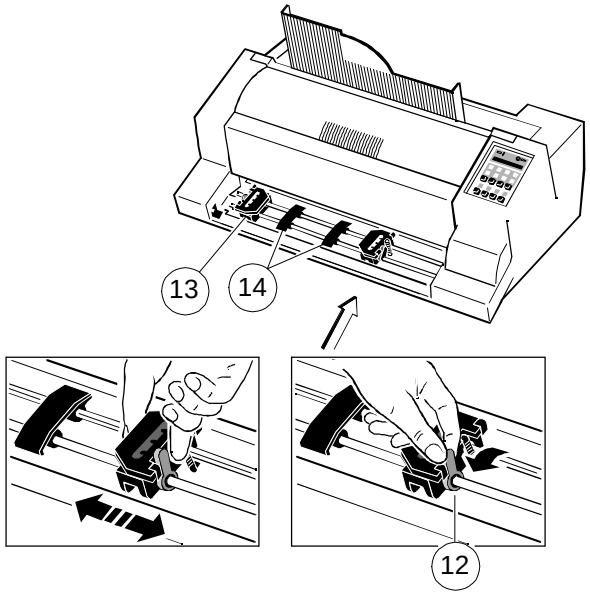

- Open the tractor covers (16) and insert the paper.
- Close the tractor covers.
- Tighten the upper edge of the fanfold paper by slightly pushing the right tractor to the right. Make sure not to stress the paper too much.
- Lock the tractors by pushing back the green lock lever again.

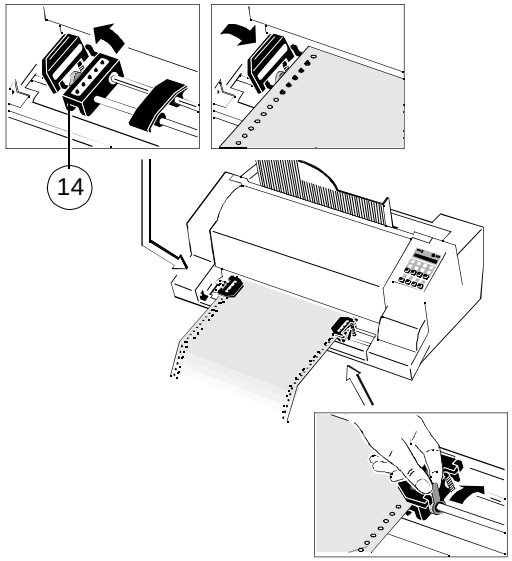

- Reapply the manual front insertion guide

Note: **If you do not refit the manual front insertion guide, there is no guarantee for a proper paper transport and accurate printing.**

- Select the paper source **TRACTOR** using either the menu selection of the printer or your software (chapter 1.9).

- Initiate a printout (chapter 1.10), to check the margins. Readjust the tractors until the printout appears within the desired margins.

1.8 Manual Sheet Insertion

Install the output stacker (5) into one of the two rails in the top cover (2).
The meaning of the two Positions:

- for paper with 80 g/m² or thicker use the steeper position (left picture);

- for thinner paper use the less inclined position (right picture).

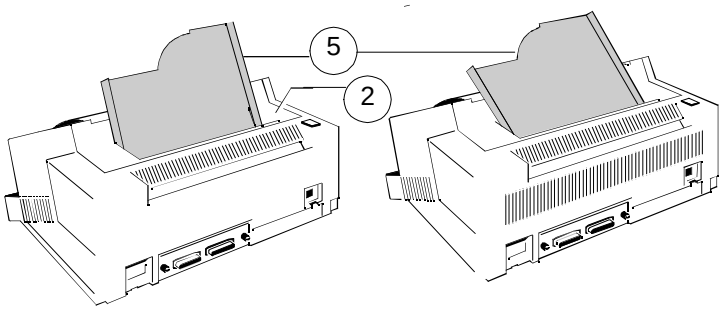

- Check, if the manual sheet insertion is installed.

- Move the left hand paper guide into the position indicated by ◎ (22) on the insertion guide. In this setting the margin has the smallest value possible.

- Adjust the right hand paper guide to the width of the paper to be used.

- Select **MANUAL** as the paper source using either the menu settings or your software (see also chapter **1.9 Paper Source Selection**).

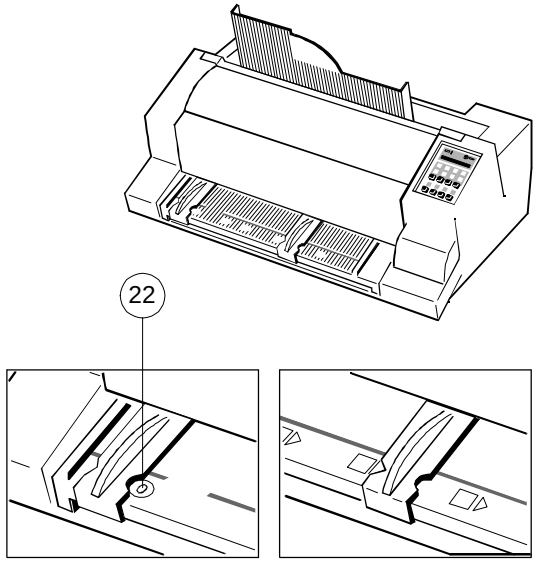

Note: If continuous form paper is in print position on the platen and has not been teared off, it will be moved forward and **TEAR OFF PAPER** will be displayed.

1.9 Paper Source Selection

The basic selections for PAPER SOURCE are:

- TRACTOR (Default, indicated by ★)
- MANUAL

Select 'MANUAL' as paper source on the operator panel

The following diagram shows which keys to press and what is displayed on the operator panel.

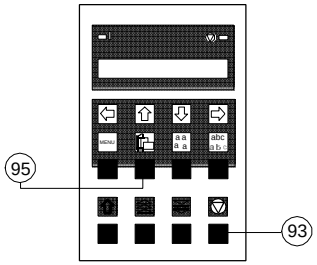

	Key	Display
1.	Switch the printer ON and wait for the message **READY 4 ELQ**.	
2.	(93)	LOCAL
3.	(95)	← TRACTOR ★

Note: Starting now the top row keys function as arrow keys.

4.	[⇓]	← MANUAL
5.	[⇒]	← MANUAL ★
6.	(93)	READY 4 ELQ

- After that **LOAD MANUAL** is displayed. Insert a single sheet evenly. After a short delay, the printer draws in the sheet.

1.10 Test Printouts

There are three test printouts available.

- **PRINT TEST 1** shows a pattern of all printable characters. Use this to check if the printer operates correctly.
- **PRINT TEST 2** produces a standard letter (ECMA-132) which can be used for measuring the printer's throughput.
- **PRINT TEST 3** lists all available fonts, contains the page count to identify the actual number of printed pages, and gives information on technical releases which are intended for service purposes.

The print tests are printed using the parameters set in the menu, e.g. font, pitch etc. Refer to section "Menu Mode" for details.

```
ABCDEFGHIJKLMNOPQRSTUVWXYZabcdefghijklmnopqrstuvwxyz0123456789!§
§ABCDEFGHIJKLMNOPQRSTUVWXYZabcdefghijklmnopqrstuvwxyz0123456789!
!§ABCDEFGHIJKLMNOPQRSTUVWXYZabcdefghijklmnopqrstuvwxyz0123456789
9!§ABCDEFGHIJKLMNOPQRSTUVWXYZabcdefghijklmnopqrstuvwxyz012345678
89!§ABCDEFGHIJKLMNOPQRSTUVWXYZabcdefghijklmnopqrstuvwxyz01234567
789!§ABCDEFGHIJKLMNOPQRSTUVWXYZabcdefghijklmnopqrstuvwxyz0123456
6789!§ABCDEFGHIJKLMNOPQRSTUVWXYZabcdefghijklmnopqrstuvwxyz012345
56789!§ABCDEFGHIJKLMNOPQRSTUVWXYZabcdefghijklmnopqrstuvwxyz01234
456789!§ABCDEFGHIJKLMNOPQRSTUVWXYZabcdefghijklmnopqrstuvwxyz0123
3456789!§ABCDEFGHIJKLMNOPQRSTUVWXYZabcdefghijklmnopqrstuvwxyz012
23456789!§ABCDEFGHIJKLMNOPQRSTUVWXYZabcdefghijklmnopqrstuvwxyz01
123456789!§ABCDEFGHIJKLMNOPQRSTUVWXYZabcdefghijklmnopqrstuvwxyz0
0123456789!§ABCDEFGHIJKLMNOPQRSTUVWXYZabcdefghijklmnopqrstuvwxyz
z0123456789!§ABCDEFGHIJKLMNOPQRSTUVWXYZabcdefghijklmnopqrstuvwxy
yz0123456789!§ABCDEFGHIJKLMNOPQRSTUVWXYZabcdefghijklmnopqrstuvwx
xyz0123456789!§ABCDEFGHIJKLMNOPQRSTUVWXYZabcdefghijklmnopqrstuvw
wxyz0123456789!§ABCDEFGHIJKLMNOPQRSTUVWXYZabcdefghijklmnopqrstuv
vwxyz0123456789!§ABCDEFGHIJKLMNOPQRSTUVWXYZabcdefghijklmnopqrstu
uvwxyz0123456789!§ABCDEFGHIJKLMNOPQRSTUVWXYZabcdefghijklmnopqrst
tuvwxyz0123456789!§ABCDEFGHIJKLMNOPQRSTUVWXYZabcdefghijklmnopqrs
stuvwxyz0123456789!§ABCDEFGHIJKLMNOPQRSTUVWXYZabcdefghijklmnopqr
rstuvwxyz0123456789!§ABCDEFGHIJKLMNOPQRSTUVWXYZabcdefghijklmnopq
qrstuvwxyz0123456789!§ABCDEFGHIJKLMNOPQRSTUVWXYZabcdefghijklmnop
pqrstuvwxyz0123456789!§ABCDEFGHIJKLMNOPQRSTUVWXYZabcdefghijklmno
opqrstuvwxyz0123456789!§ABCDEFGHIJKLMNOPQRSTUVWXYZabcdefghijklmn
nopqrstuvwxyz0123456789!§ABCDEFGHIJKLMNOPQRSTUVWXYZabcdefghijklm
mnopqrstuvwxyz0123456789!§ABCDEFGHIJKLMNOPQRSTUVWXYZabcdefghijkl
lmnopqrstuvwxyz0123456789!§ABCDEFGHIJKLMNOPQRSTUVWXYZabcdefghijk
klmnopqrstuvwxyz0123456789!§ABCDEFGHIJKLMNOPQRSTUVWXYZabcdefghij
jklmnopqrstuvwxyz0123456789!§ABCDEFGHIJKLMNOPQRSTUVWXYZabcdefghi
ijklmnopqrstuvwxyz0123456789!§ABCDEFGHIJKLMNOPQRSTUVWXYZabcdefgh
hijklmnopqrstuvwxyz0123456789!§ABCDEFGHIJKLMNOPQRSTUVWXYZabcdefg
ghijklmnopqrstuvwxyz0123456789!§ABCDEFGHIJKLMNOPQRSTUVWXYZabcdef
fghijklmnopqrstuvwxyz0123456789!§ABCDEFGHIJKLMNOPQRSTUVWXYZabcde
efghijklmnopqrstuvwxyz0123456789!§ABCDEFGHIJKLMNOPQRSTUVWXYZabcd
defghijklmnopqrstuvwxyz0123456789!§ABCDEFGHIJKLMNOPQRSTUVWXYZabc
cdefghijklmnopqrstuvwxyz0123456789!§ABCDEFGHIJKLMNOPQRSTUVWXYZab
bcdefghijklmnopqrstuvwxyz0123456789!§ABCDEFGHIJKLMNOPQRSTUVWXYZa
abcdefghijklmnopqrstuvwxyz0123456789!§ABCDEFGHIJKLMNOPQRSTUVWXYZ
Zabcdefghijklmnopqrstuvwxyz0123456789!§ABCDEFGHIJKLMNOPQRSTUVWXY
YZabcdefghijklmnopqrstuvwxyz0123456789!§ABCDEFGHIJKLMNOPQRSTUVWX
XYZabcdefghijklmnopqrstuvwxyz0123456789!§ABCDEFGHIJKLMNOPQRSTUVW
```

PRINT TEST 1

```
Eilzustellung

Norddeutsche Farbwerke KG
Herrn Dr. Grauert
Große Elbstraße 64

2000 Hamburg 4


Org. III 5/37           H-A        4 34             22.04.75
17.04.75                Volkmann

Vordruckgestaltung für den allgemeinen Schrift-
verkehr, für das Bestell- und Rechnungswesen             E i l t

Sehr geehrter Herr Dr. Grauert,

Sie können das Schreiben der Briefe, Bestellungen, Rechnungen usw.
sowie das Bearbeiten des Schriftguts rationalisieren, wenn die
Vordrucke Ihres Unternehmens den folgenden Normen entsprechen:

      DIN 676 Geschäftsbrief; Vordrucke A4
      DIN 677 -; Vordruck A5
      DIN 679 Geschäftspostkarte; Vordrucke A6

      DIN 4991 Vordrucke im Lieferantenverkehr; Rechnung
      DIN 4992 -; Bestellung (Auftrag)
      DIN 4993 -; Bestellungsannahme (Auftragsbestätigung)
      DIN 4994 -; Lieferschein/Lieferanzeige
      DIN 4998 Entwurfsblätter für Vordrucke

Diese Normen enthalten alle Einzelheiten für den sinnvollen und
zweckmäßigen Aufdruck. Wenn dazu bei der Beschriftung genormter
Vordrucke DIN 5008 'Regel für Maschinenschreiben' beachtet wird,
entstehen übersichtliche und werbewirksame Schriftstücke.

Die beifgefügten 6 Mustervordrucke zeigen, daß das Beachten der
Normen die künstlerische und werbewirksame Gestaltung der Vor-
drucke nicht ausschließt.

Da wir uns auf die Herstellung genormter Vordrucke spezialisiert
haben, können wir besonders billig liefern. Eine Probestellung
wird Sie und Ihre Geschäftsfreunde von den Vorteilen überzeugen.

Mit bester Empfehlung

NORAG
Druckerei und Verlagshaus KG


Herrmann

Anlagen

6 Mustervordrucke
```

PRINT TEST 2

To start a print test:

1. Switch the printer ON (display shows **READY 4 ELQ**).

The following identifies the keys to press and the corresponding operator panel displays.

	KEY	Display	
2.	(93)	LOCAL	
3.	MENU (94)	MACRO SELECT	→
4.	[⇓] -- [⇓]	INSTALLATION	→
5.	[⇒]	← INTERFACE	→
6.	[⇑] -- [⇑]	← SELF TEST	→
7.	[⇒]	← PRINT TEST 1	

Use [⇓] to select PRINT TEST 2 or 3.

8.	[⇒]	← PRINT TEST 1	*
9.	(93)	PRINT TEST 1	*

The printer starts to print using paper from the defined paper source.

Note: A number of VALUE settings is summarized in a "Macro". It is possible to have a total of four macros, each with a different summary of VALUE settings.

To stop the print test:

1. (93) ← PRINT TEST 1 *
2. [⇐] ← SELF TEST →
3. (93) READY 4 ELQ

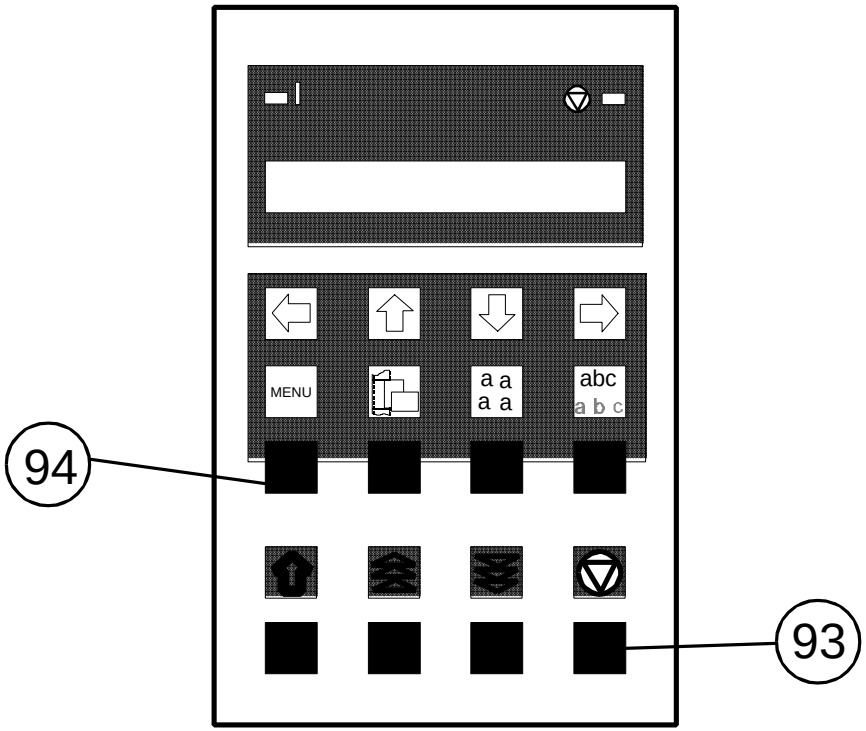

1.11 Connection to a Computer

Parallel/Serial Interface

- Switch the printer and computer OFF.
- Connect the interface cable coming from the computer to the printer's parallel (17) or serial port (18).
- The printer is set by default to **SHARED** interface with the following parameters:
  - 8 Kbyte buffer,
  - 8 bit,
  - even parity,
  - 9600 baud and
  - DTR protocol.

SHARED means that, after Power-ON, both the serial and the parallel interfaces are available for data transfer. The port to which data is sent becomes active automatically. If the parallel or serial parameters need to be changed, see Chapter **2, Menu Mode**, and **Appendix A, Interface Description.**

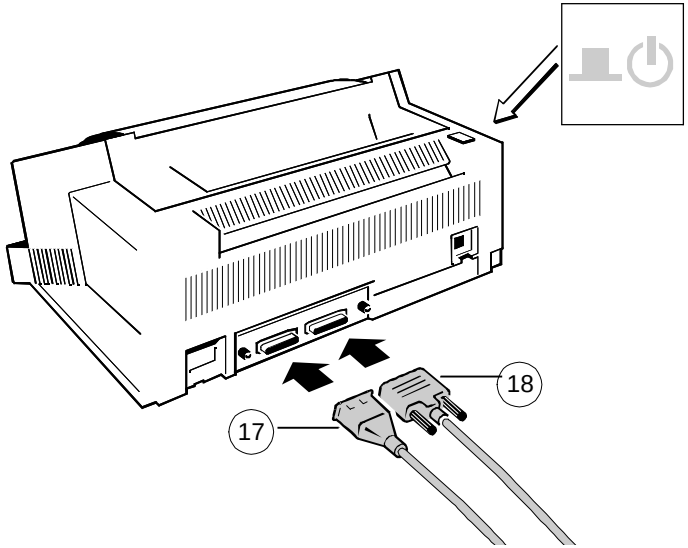

1.12 Emulation Selection

The following emulations are included in the PM Ser/Par E:

- Philips GP in Macro 1
- IBM ProPrinter XL 24 in Macro 2
- IBM ProPrinter XL 24 AGM in Macro 3
- EPSON LQ / ESC/P2 in Macro 4 (Default)

To change from one emulation to another, follow the procedure below. The example shows the keys to press along with the display information for a change from EPSON LQ / ESC/P2 in macro 4 to IBM ProPrinter in macro 2.

1. Switch the printer ON. The display shows **READY 4 ELQ**.
2. MACRO 2
3. [⇒] READY 2 IPP

The information **READY 2 IPP** indicates the selected macro and the emulation of this macro, for example:

1	GP	Macro 1 with GP Emulation
2	IPP	Macro 2 with IBM Proprinter Emulation
3	AGM	Macro 3 with IBM Proprinter AGM Emulation
4	ELQ	Macro 4 with Epson Emulation.

Note: A number of VALUE settings is summarized in a "Macro". It is possible to have a total of four macros, each with a different summary of VALUE settings.

2. Printer Operation

2.1 Control Panel

The control panel
- controls the set-up for communication with the host computer
- controls various parameter settings
- allows manual control of the paper handling
- gives information about the printer's status.

The 16-character Liquid Crystal Display (LCD) (51) indicates the current status of the printer. If an error occurs (e.g. COVER OPEN), the resulting error message overrides any other displayed message. When the error condition not longer exists, the original status information appears on the display.

The green Power ON indicator (53) is lit when the printer is supplied with power by setting the power ON/OFF switch to ON.

The yellow STOP indicator (52) is lit when the printer is in the STOP mode.

The printer enters the STOP mode either when (93) is pressed or when an error condition occurs such as NO PAPER, COVER OPEN, etc.

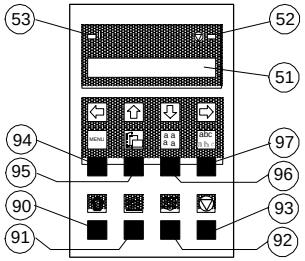

2.2 Function Keys

The function keys of the operator panel are grouped into two rows. The function of a key depends on the printer operation state. Following operation states are possible:
- **READY** or **BUSY**
- **LOCAL**

2.2.1 Short Description of Keys

- in the printer operation state **READY** or **BUSY**

Number	Symbol	Functionality in ONLINE/READY Mode
90		**Quick VERT.POS.ADJ.** setting entry
91		**FANFOLD DISPLACEMENT** mode entry
92		No function
93		[START/**STOP**] key - after pressing the key, the printer enters the **LOCAL** mode.
94-97	MENU	**MACRO SELECTION** to enter the quick macro selection mode.

Note: It is possible to lock the function of the above described keys in the printer operation state **READY** or **BUSY**. Use the menu function **MENU ACCESS** with the setting **QUICK SET OFF** (see **Page 3-20**). If the keys are locked the printer shortly displays **LOCKED** when pressing one of the keys.

It is not possible to lock .

- in the printer operation state **LOCAL**

Number	Symbol	Functionality in LOCAL Mode
90		**EJECT FORM**
91, 92		Paper movement up and down
93		**START**/STOP key - after pressing the [**START**/STOP] key, the printer enters the **READY** or **BUSY** mode.
94	MENU	**MENU** key - to enter the Menu Mode in the first level.
95		**PAPER SOURCE** key - to start the paper source selection.
96		**FONT** key - to start the font selection.
97		**PITCH** key - to start the pitch selection or to confirm a certain set up, or to confirm the quick macro selection.

Note: After pressing one of the keys MENU, a a / a a, abc / a b c the menu mode is activated. Now the keys of the top row can only be used as cursor keys to move within the menu tree (right [⇒], left [⇐], up [⇑] and down [⇓]).

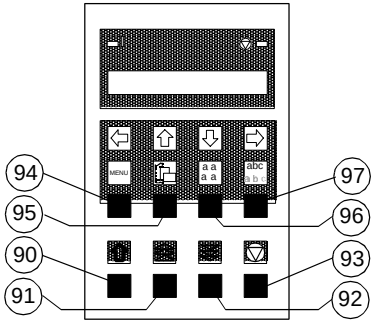

2.2.2 Detail Description of Keys

- in the printer operation state **READY** or **BUSY**

  - **Quick Settings** (only active if not locked in the menu function **MENU ACCESS** with **QUICK SET OFF** (see **Chapter 3**)).

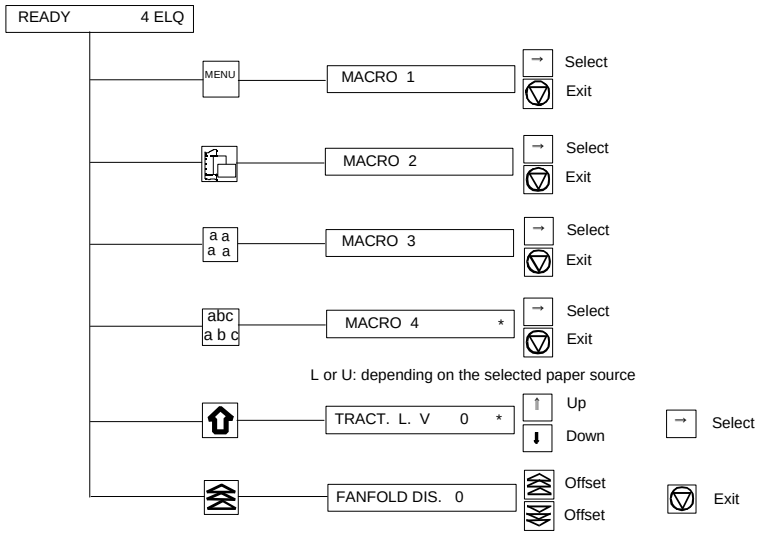

- **Top Row Keys**

  The **Quick Macro Selection** mode is entered when one of the top row keys MENU, , a a / a a or abc / a b c is pressed. From the left to the right macro 1 to macro 4 will be selected. Pressing of key causes the printer to change in the **STOP**-mode and in the display appears the message **MACRO 2**. Pressing key [⇒] confirms the macro selection and changes the printer into the **READY** or **BUSY** mode. After this sample the printer the message on the display is **READY 2 IPP**. That means macro 2 with IBM ProPrinter emulation is selected.

  If you press one of the above described key erroneously, press for correction.

Note: Macro selection means a change of all configuration parameters of the macro concerned.

- **Lower Row Keys**

  In case a certain application requires a specific vertical positioning of the printout on a continuous form, two possibilities are provided for the **READY** or **BUSY** mode:
  - vertical position adjustment **VERT.POS.ADJ.** with key (90)
  - fanfold displacement **FANFOLD DIS** with key (91).

  - **Vertical Position Adjustment (VERT.POS.ADJ.)** (90)

    This can be set differently for each macro to exactly position the printout in relation to the top edge of the form in use. Using this function, the TOP MARGIN and BOTTOM MARGIN settings are taken into account as well.

    The parameter is part of the printer´s configuration set up memory and can be stored with the **SAVE** function.

    The **VERT. POS.ADJ.** mode can directly be called up in the status **READY** or **BUSY** by pressing key . In this case a set up is possible for the actually paper source of the selected macro. With **TRACTOR V**, **MANUAL V** or **BIN x V** (x = 1-3) the printer asks for the value of the actually paper source.

This parameter covers a range of $-^{15}/_{60}$ to $+^{240}/_{60}$ of an inch (0.42 mm), where "**-**" is up the page and "**+**" is further down the page (see also the table in Chapter **3.4 Configuring the Printer** for **VERT.POS.ADJ.**).

Note: The set up of **VERT.POS.ADJ.** will become effective at the next page of the form. Therefore, it is recommended to perform **VERT.POS.ADJ.** set up as long as the paper is in the park position and before starting the print job.

- **Fanfold Displacement (FANFOLD DIS)** (91)
  A continuous form can manually be displaced by this function when it is either correctly loaded at the park position or already fed and partly printed. The Fanfold Displacement mode can only be called up in the status **READY** or **BUSY**.

Note: The key has no effect when in the **READY** or **BUSY** mode.

As soon as the Fanfold Displacement mode is entered by pressing , the printer stops printing and changes into the **LOCAL** mode. The display shows the message **FANFOLD DIS** with the value **0**. By pressing (91) or (92) a vertical displacement is possible.

	Key	Display
1		READY
4 ELQ		
2		FANFOLD DIS 0
3		FANFOLD DIS 0, +1, +2, +3...
4		FANFOLD DIS
....+3, +2,+ 1, 0		
5		READY
4 ELQ		

Note: This parameter influences the line counter of the current print job and cannot be saved. A form feed (FF) sent by the application to the printer cancels all these settings.

How to Use this Function

Preprinted paper (e.g. bill of lading) has to be adjusted exactly. Following errors are possible:

- the printed value is too high - the fanfold paper has to be moved a little bit higher.
- the printed value is too low - the fanfold paper has to be moved a little bit lower. No backward movement is possible for a form in park position or with the print head on the first line. The displacement will become effective on the next page. A negative displacement is possible if this function is used during a current print job (not at the beginning of the page).

After pressing again, paper is fed in case it was in the park position. In all other cases the paper remains at its actual position. Each further pressing of increases the line counter by increments of $^{1}/_{60}$ inch. Each further pressing of decreases the line counter by decrements of $^{1}/_{60}$ inch. Holding of or causes the first 20 increments in single steps ($^{1}/_{60}$ inch), thereafter in multiplier of ten which results in a continuous increment or decrement of the offset counter by $^{1}/_{6}$ inch. If the reached value is too high go backwards by pressing .

The offset to the current position is shown on the display. Dependent on the status of the internal print buffer, the offset will be immediately executed after having resumed the printing or after having printed the remaining data in the internal print buffer. The offset value is not stored in the configuration set up and influences only the actual line counter. The maximum displacement range is the distance between the actual position and the page border plus one full page, but no more than 999 steps (nearly 1 inch). A backward movement is possible from the actual position to the top of that page.

If the setting is procedure is completed change with (93) to the **READY** or **BUSY** mode.

There are two possibilities for the displacement to become active:
- If a positive displacement is set before starting the print job the printer will move the paper into the right position first and then start printing.
- If the displacement is set during a print job, the printer prints the contents of the print buffer. Afterwards, the displacement will become active. All following data are at the new position.

- Pressing [START/**STOP**] (93)
  The printer changes into the **LOCAL** mode (displayed) and turns on the STOP indicator (52). All printer and paper handling operations are stopped. After pressing again, the printer quits the **LOCAL** or **Menu** mode.

2.2.3 Meaning of the Keys in the LOCAL Mode

- **Lower Row Keys**
  - **Insert or Eject Key** (90)
    After pressing the Insert/Eject key, fanfold paper from the park position is fed into the print position, and fanfold paper from the print position is fed into the cut/tear off position (depending on the setting or the printer type). Paper that has been retracted into the cut/tear off by the Insert/Eject key will be moved automatically into the print position once the printer receives a print command.

Note: This key is not active while the top cover is open.

  - **The Paper Feed Key** (91) **and the Reverse Paper Feed Key** (92)
    The paper moves $^{1}/_{90}$" (0.28 mm) in the direction of the arrows. Holding down the key results in continuous feeding.

    Forward movement of paper from the park position is stopped at the print position. Forward movement of paper from the print position is stopped at the tear off position or it will be cut off (depending of the setting or of the printer type).

    Backward movement of paper is stopped at either the park position, the print position or the tear off position.

  - **START**/STOP Key (93)
    - turns off the STOP indicator
    - makes the printer ready for operation
    - either starts the printout or self-test functions when selected (see MENU mode) or causes the interface status to change to **READY** or **BUSY** (displayed)
    - exits the MENU mode.

2.3 Menu Mode

Instead of having a multitude of dip switches, all operator selectable features are accessable via the control panel and combined in the printer MENU.

This feature provides:
- easy handling of configuration (interface, etc.)
- quick parameter changes during an application
- a **SAVE** function to make changes permanent (until purposely reset), facilitating changes in default settings.

The menu has several levels:
- The first level contains the Main Functions
- Level 2 contains Sub-Functions
- Level 3 allows to select/confirm values and contains further Sub-Functions
- Level 4 allows to select/confirm values

For easy selection of paper source, font, pitch and macro, please refer to the Quick Settings section in this chapter.

2.3.1 To Activate the Menu:

- Press
  The printer is in the STOP mode, the display shows **LOCAL**
- Press MENU in the top row of the control panel. As soon as the menu mode has been activated, the keys in the top row can only be used as cursor keys to move within the menu tree (up, down, right, and left).

Selection within a level:

- press [⇑] or [⇓] key; the keys have a wrap around function, i.e. after the last value the first value is repeated.

On the display you will find the following four characteristic types of information:

```
MENU-TEXT          ⇒
```

This display is only shown if you are in the Main Function. To switch to the next level press [⇒].

```
⇐ MENU-TEXT        ⇒
```

Now you are in a Sub-Function. Movement in both directions is possible by using the [⇐] key or [⇒] key.

```
⇐ MENU-TEXT        *
```

In the last level, labelled **select/confirm values**, the asterisk (⋆) to the right indicates the actual selection.

By using the [⇑] or [⇓] key, you are able to select a new value. You get the display:

```
⇐ MENU-TEXT
```


2.3.2 To Confirm Selection:

- press [⇒]; the confirmed value is displayed with an asterisk (⋆) in the last position as shown in the picture before.

Note: All cursor keys have an auto repeat function.

The MENU mode is left either by pressing or by moving to the MAIN FUNCTION level and then pressing the [⇐] key.

A number of VALUE settings is summarized in a "Macro". It is possible to have a total of four macros, each with a different summary of VALUE settings. The standard macros have the following emulations defined:

Macro	Emulation
1	Philips GP
2	IBM Proprinter XL 24
3	IBM Proprinter XL 24 AGM
4	EPSON LQ 1060, LQ 2550 / ESC/P2

Macro parameters can be tailored to specific application requirements. This feature is highly beneficial in case of frequent changes between applications in multi-user environment. Instead of having to adjust the menu settings each time before a particular application is starting, the user simply selects the macro containing the pre-defined set-up configurations.

2.3.3 How to Save Settings

The settings selected and confirmed are only active until the printer is switched off. In order to prevent losing your new settings you can save them using the MAIN FUNCTION **SAVE**.

KEY	Display
1. (93)	LOCAL
2. (94)	MACRO SELECT →
3. [⇑] -- [⇑]	SAVE →
4. [⇒]	SAVING NOW ★ (display is flashing)
4a.	SAVE →
5. (93)	READY 4 ELQ

Note: The values of the "current settings" and the macro settings can be printed out on a list using the function **PRINT OUT**.

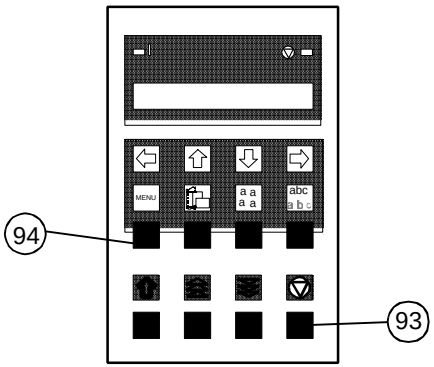

2.3.4 Quick Settings

The keys MENU (94) (to select a pre-configured macro), (95), a a a a (96), and abc a b c (97) are shortcuts in the menu tree. These particular selections can be changed quickly without having to move through the entire menu (see fold out of structure diagram). As soon as one of the keys in the top row has been activated, all four keys can only be used as cursor keys to move within the menu tree ([⇑] up, [⇓] down, [⇒] right, and [⇐] left).

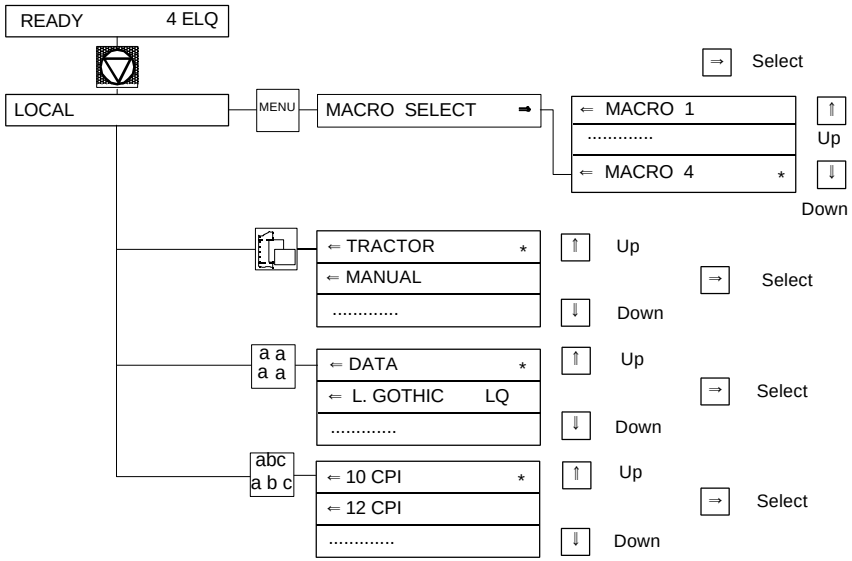

2.4 Status and Error Messages

The following messages are displayed if a condition exists which prevents normal operation of the printer.

LOCAL
Entered when [START/STOP] was pressed. The STOP indicator is lit.

COVER OPEN
Displayed when the top cover is open and the printer is in the **READY** or **BUSY** mode.

LOAD BIN
Displayed whenever a form feed command or print command is given by the host to an empty ASF cassette. The printer enters the STOP mode.

LOAD TRACTOR
Displayed when the host sends a form feed or print command to an empty tractor cassette. The printer enters the STOP mode.

LOAD MANUAL
Same as LOAD TRACTOR except that the machine does **not** enter the **STOP** mode! Paper should be fed manually; after a short delay the printer will accept paper and starts printing.

PAPER JAM TRF
PAPER JAM ASF
PAPER JAM MANUAL
Displayed if a form jams in the ASF or if successive line feeds fail to move fanfold paper correctly when tractor feed is used. Please refer to chapter 5 **Troubleshooting and Diagnostics** for suggestions how to remove a paper jam.

TEAR OFF PAPER
Displayed when a switch has been initiated from currently tractor to a different paper source and the fanfold paper could not retreat into the parking position. The operator must "tear off" the paper along the tear off edge which is located directly above the fanfold paper output (paper should be torn off from left to right). Press to enable the fanfold paper to be fed backwards to a park position so that the newly selected paper source can be used.

REMOVE PAPER
This message will be displayed if the output for cut sheets (Bin or Manual) is selected to **FRONT SIDE/KEY**. After printing and moving out at the front side the printer enters the STOP mode and displays **REMOVE PAPER.** Remove paper and press .

Note: If there are error messages like **AGC ERROR**, **HORIZ. DRIVE ERROR**, or **BUFFER OVERFLOW** see Chapter **5.2 Error Messages**, or call your service.

3 Configuring the Printer

3.1 What is Configuring

This chapter describes how to use the operator panel and menu settings to set up or configure your so that the printer and your computer system can communicate correctly with each other.

Communication between the two requires that both the computer operating system and the printer have the same communication settings or features. The most important of those are:

- protocol,
- baud rate,
- data bits,
- parity.

You may also need to change some of the printer's other features depending on your hardware and application requirements, for example:

- paper handling
- text processing.

The MENU mode allows you to access the configuration memory. All settings of the printer are stored in this memory and can be printed out on a list. The possible settings are discussed in detail in the following pages.

The menu **printout** illustrates the actual printer set-up. The following steps show which keys to use to start this printout.

	KEY	Display
1.	Switch the printer ON	READY 4 ELQ
2.	(93)	LOCAL
3.	MENU (94)	MACRO SELECT →
4.	[⇑]	PRINT OUT →
5.	[⇒]	← PRINT OUT
6.	[⇒]	← PRINT OUT ★
7.	(93)	← PRINT OUT ★

After feeding paper from the defined paper source, the printer starts to print. When printing is completed, the following message will be displayed:

8.		← PRINT OUT
9.	(93)	READY 4 ELQ

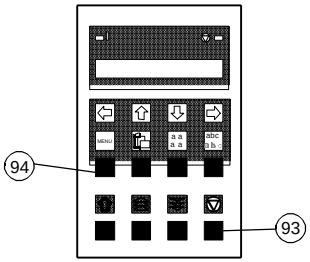

3.2 Standard Configuration

The standard configuration is reflected in the following printout provided that no parameters have been changed.

PRINT OUT		VERSION	20xxxxxx	
INTERFACE		ADJUSTMENT		
BUFFER	8 KBYTE	AGC POSITION	24	
WORD LENGTH	8 BIT	PLATEN GAP	0	
I/F TYPE	SHARED	PAPER-IN ADJ.	0	*)
BAUD-RATE	9600 BPS	CUT. V-POS	0	
PARITY BIT	EVEN	UNI-DIRECT.CMD	YES	
PROTOCOL	DTR	TRACT. FF-MODE	IGNORE FF	
CTS MODE	IGNORE CTS			
		MENU ACCESS	ALL FUNCTIONS	

	CURRENT SETTINGS	MACRO 1	MACRO 2	MACRO 3	MACRO 4*
FONT	DATA	DATA	DATA	DATA	DATA
PRINT QUALITY	LQ	LQ	LQ	LQ	LQ
SUB/SUPER FONT	YES	YES	YES	YES	YES
PITCH	10 CPI	10 CPI	10 CPI	10 CPI	10 CPI
LINE	6 LPI	6 LPI	6 LPI	6 LPI	6 LPI
PAGE LENGTH	72 LINES	72 LINES	72 LINES	72 LINES	72 LINES
TRACTOR V-POS	0	0	0	0	0
MANUAL V-POS	0	0	0	0	0
BIN 1 V-POS	0	0	0	0	0
BIN 2 V-POS	0	0	0	0	0
BIN 3 V-POS	0	0	0	0	0
LEFT MARGIN	1 COLUMNS	1 COLUMNS	1 COLUMNS	1 COLUMNS	1 COLUMNS
RIGHT MARGIN	136 COLUMNS	136 COLUMNS	136 COLUMNS	136 COLUMNS	136 COLUMNS
TOP MARGIN	1 LINES	1 LINES	1 LINES	1 LINES	1 LINES
BOTTOM MARGIN	1 LINES	1 LINES	1 LINES	1 LINES	1 LINES
PERF. SKIP	YES	YES	YES	YES	YES
PAPER SOURCE	TRACTOR	TRACTOR	TRACTOR	TRACTOR	TRACTOR
PAPIER EXIT	BATCH	BATCH	BATCH	BATCH	BATCH
EMULATION	EPSON LQ	EPSON LQ	IBM PROPR.	IBM PROPR. AGM	EPSON LQ
CHARACTER SET	EPSON EXT.GCT 3: GERMANY	EPSON EXT.GCT 3: GERMANY	IBM SET 2 1: U.S.A.	IBM SET 2 1: U.S.A.	EPSON EXT. GCT 1: U.S.A.
LINE MODE	LF=LF, CR=CR	LF=LF, CR=CR	LF=LF, CR=CR	LF=LF, CR=CR	LF=LF, CR=CR
$$-COMMAND	NO	NO	NO	NO	NO
TEAR-OFF-MODE	NO	NO	NO	NO	NO
PRE-SEPARATION	NO	NO	NO	NO	NO

Note: An asterisk (★) indicates the actual macro.

*) This value is dependent on factory setting!

All this standard settings of the firmware will be restored with the menu function **RECALL FACTORY**.

3.3 Explanation of the printout on the previous page

The heading **PRINT OUT** gives information about the **VERSION** of the printer's firmware.

The next two headings are followed by two columns of standard settings:

- **INTERFACE** - for communication between the computer operating system and the printer it is necessary to have the same communication settings or features. The standard settings are:
  - Buffer — 8 Kbyte
  - Word Length — 8 Bit
  - I/F Type — Shared
  - Baud Rate — 9600 Bps
  - Parity Bit — Even
  - Protocol — DTR
  - CTS Mode — Ignore CTS
- **ADJUSTMENT** - all parameters are for adjustment of the printer and the paper (see also the following pages).

The last part of the printout is a list with all **MACRO** settings. In this case **MACRO 4** is marked with an asterisk (★) which identifies it as the active macro.

If you make modifications in the active macro without saving them you will find the new settings under the heading **CURRENT SETTINGS**. Unless they are saved, the modifications will stay active only until the printer is switched off in which case the macro settings marked with the asterisk will be reactivated.

3.4 Explanation of Individual Menu Items

Main Functions

The following main functions are available:

– **MACRO SELECT**
To select one of the four macros which can be used for quickly changing the printer settings for different applications. For example: Application A needs fanfold paper cut into single sheets with a top margin of one, application B processes fanfold paper in a batch with a top margin of six. Simply by pressing MACRO SELECT the macro containing the information for the specific application requirements can be activated.

– **CHANGE MACRO**
In this part it is possible to create a macro for specific application needs (For detail information see chapter **Function CHANGE MACRO** beginning on the next page).

Note: Most parameters can be set via the control panel or via escape sequences from the host computer. The changes via escape sequences are visible in the column **CURRENT SETTINGS**

– **INSTALLATION**
In the first sub-function named **INTERFACE** you can manipulate parameters to enable communication with the host.
In the second sub-function labelled **ADJUSTMENT** you can optimize your printouts. (Detail information you will find in the **Sub-Function INTERFACE / ADJUSTMENT**)

– **SAVE**
Any desired changes to the default settings can be saved here. After power on the new settings are activated.

While this function is operating the display flashes **SAVING NOW**.

– **PRINT OUT**
This function initiates a printout of the parameter settings and macro definitions. This printout is helpful for future reference and when macros are to be changed.
To actually start the print operation it is necessary to leave the STOP mode (by pressing the key).
While this function is operating the display shows **PRINT OUT**.

Main Function CHANGE MACRO

– **Font**
A font is a family of characters with the same style and size. The appearance of the font can be varied by using attributes such as: size, **bold**, *italic*, etc.

The fonts included in the PM SER/PAR are:
- Data
- Roman
- San Serif
- Courier
- Prestige
- Script
- OCR B
- OCR A
- Orator-C
- Orator
- DATA LARGE

see **Appendix B** for print samples.

Note: **PRINT TEST 3** lists all available fonts. The firmware of the printer indicates also barcodes. Detail information for printing barcodes are in Appendix **G Barcodes Quick Reference** (green pages).

- **Print Quality**
  Three different print quality levels can be selected:
  - Draft quality (font "Data")
  - Near letter quality (NLQ displayed with the font name)
  - Letter quality (LQ displayed with the font name).

  Different print qualities result in different print speed.

- **Sub/Super Font**
  When the SUB/SUPER FONT is set to "**NO**", sub and superscript text will be raised or lowered a half line, but the text size itself will not change.
  When set to "**YES**", the text size will be reduced, and printed above or below the line.
  Example: **YES** 5^2 or 5_2
  NO 5^2 or 5_2

- **Pitch**
  Indicates the number of characters printed per inch (10, 12, 15, 17, 18, 20 or proportional).
  Any pitch setting can be combined with any available font. In some cases this may conflict with font designs. The pitch setting is, therefore, a matter of personal taste.

- **Line**
  Determines the number of lines per inch (line space).

- **Page Length** (only for fanfold paper)
  Page length is expressed in terms of lines within the range of 5 to 132 lines. Any page length setting is based on six lines per inch, regardless of the number of lines per inch selected in the line setting or defined by the application.

  The following indicates the number of lines for the most common paper sizes.

Paper length in inches	Appropriate setting in no. of lines
4	24
4 $^1/_6$	25
6	36
8	48
8 $^1/_2$	51
11	66
11 $^2/_3$	70
12 (default setting)	72

  The page length setting is the basis from which perforation skip, TEAR-OFF or CUT mode and margins operate.

  An incorrect page length, therefore, gives an incorrect perforation skip.

- **Vertical Positioning Adjustment** (VERT.POS.ADJ.)
  This function changes the vertical position in the current macro for the five different paper paths **TRACTOR V-POS** ,**MANUAL V-POS** or **BIN x V-POS** (x = 1 up to 3) exactly position the printout in relation to the top edge of the form in use. It is meant to be a corrective parameter to meet variations in paper size and pre-printed material. Using this function, the **TOP MARGIN** and **BOTTOM MARGIN** setting are taken into account as well.

  This parameter covers a range of - $^{15}/_{60}$ to + $^{240}/_{60}$ of an inch, where "**-**" is up the page and "**+**" is further down the page.

  The following table shows some values in inch and millimetres.

+/- 1	= +/- $^{1}/_{60}$"	= +/- 0,42 mm	+/- 9	= +/- $^{9}/_{60}$"	= +/- 3,81 mm
+/- 2	= +/- $^{2}/_{60}$"	= +/- 0,85 mm	+/- 10	= +/- $^{10}/_{60}$"	= +/- 4,23 mm
+/- 3	= +/- $^{3}/_{60}$"	= +/- 1,27 mm	+/- 11	= +/- $^{11}/_{60}$"	= +/- 4,66 mm
+/- 4	= +/- $^{4}/_{60}$"	= +/- 1,69 mm	+/- 12	= +/- $^{12}/_{60}$"	= +/- 5,08 mm
+/- 5	= +/- $^{5}/_{60}$"	= +/- 2,12 mm	+/- 13	= +/- $^{13}/_{60}$"	= +/- 5,50 mm
+/- 6	= +/- $^{6}/_{60}$"	= +/- 2,54 mm	+/- 14	= +/- $^{14}/_{60}$"	= +/- 5,93 mm
+/- 7	= +/- $^{7}/_{60}$"	= +/- 2,96 mm	+/- 15	= +/- $^{15}/_{60}$"	= +/- 6,35 mm
+/- 8	= +/- $^{8}/_{60}$"	= +/- 3,39 mm	+ 16	= + $^{16}/_{60}$"	= + 6,77 mm

Attention: The set up of **VERT.POS.ADJ.** will become effective at the next page of the form. Therefore, it is recommended to perform **VERT.POS.ADJ.** set up as long as the paper is in the park position and before starting the print job.

- **The left margin** is set in $^{1}/_{10}$" steps, depending on the actual selection. The first left margin position is $^{1}/_{20}$" from the left edge of the paper which means that the letter H in regular "Data" font would be positioned $^{1}/_{20}$" from the left edge of the paper. The left margin can be set to a maximum of $^{15}/_{10}$".

- **The right margin** is set to print position 80, 132 or 136, always measured from the position of the first possible, not actual, left margin setting.

  The left margin setting is influenced by the physical setting of the left tractor. The above specifications are only correct if the tractors are in the original positions, i.e. the left perforation is aligned with the centre mark on the plastic plate (distance between the marks is $^{1}/_{10}$").

- **The top margin** indicates the first print line and is always set in steps of $^{1}/_{6}$". The position of the first margin is $^{1}/_{6}$" from the top of the paper and indicates the baseline of the letter **H** in upright "Data" font (see illustration).

  The top margin can be set to a maximum of $^{16}/_{6}$" down on the paper.

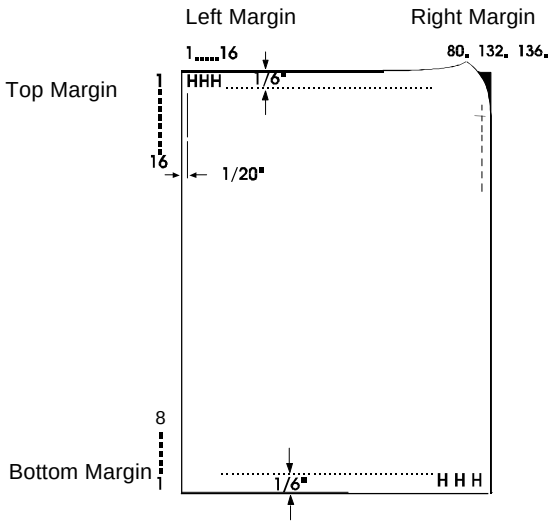

– **The bottom margin** indicates the last print line. Going beyond this margin automatically initiates a form feed. The bottom margin is always set in steps of $^{1}/_{6}$".

The bottom margin can be set to a maximum of $^{8}/_{6}$".

The above specifications are influenced by the settings in "Vertical Position" (see section "V.POS" in this chapter).

– **Perforation Skip**
  – If **PERF. SKIP** is set to **YES** the printer starts to print after specified top margin and stops printing before the bottom Margin.

  – If **PERF. SKIP** is set to **NO** the printer ignored the top and bottom margin and prints from the very first line to the very last. That means that on a standard 11" paper 66 lines are available for printing.

– **Paper Source**
The printer offers three input possibilities:
  – **TRACTOR** (fanfold paper)
  – **Manual**
  – **ASF cassettes** (optional), they can be accessed either individually or pooled in a specified sequence. Any combination or cassettes can be selected.

A corrective factor for the vertical positioning of the paper can be applied to each paper source and the Run-In-Sensor (see section **VERT.POS.ADJ.**).

Note: Please refer to chapter 7, **Technical Data**, for detailed media specifications.

– **Paper Exit** (only for single sheet paper)
It is possible to choose between **STACKER** and **FRONT SIDE** (manual front insertion). The desired paper exit can be selected via operator panel or software.

Note: If you choose the paper exit **FRONT SIDE/KEY** you have to confirm each output with a keystroke on . That is a useful option when using automatic sheet feeding which could cause a paper jam. As opposed to feeding automatically the ASF will only feed after a keystroke has been received.

– **Emulation**
The emulation determines the set of commands available for the printer (see **Appendix D, E, and F**). You can activate the following emulations:
  – **EPSON LQ**
  – **IBM PROPR.**
  – **IBM PROPR.AGM**
  – **EPSON LQ**

Note: The selected Emulation will also be stored in the actual macro. With a change of the macro (e.g. key MENU , , a a a a or abc a b c is pressed) it is possible that the emulation will also be changed. Be careful: Do not change the emulation within an application.

– **Character Set**
When selecting a character set it can be further specified by the corresponding national variants.

Detailed print samples are found in **Appendix B** and the Character Set Tables in **Appendix C**.

If a different macro is selected the default character set may change,

e.g.
  – **IBM PROPR.** emulation has the character set **IBM SET 2** as default.
  – **EPSON** emulation has the character set **EPSON EXT.GCT** as default.

– **Line Mode**
If LF = LF + CR is selected, the printer performs a carriage return (CR) for every line feed (LF) received by the interface.

If CR = LF + CR is selected, the printer performs a line feed (LF) for every carriage return (CR) received by the interface.

– **$$ Commands**
This function causes $$ either to be printed as $$ or to activate ESC commands within an application.

If this function is set to **YES** the characters are interpreted by the printer in the following way:
  – **$$** like **ESC [**
  – **$$/** like **ESC**.

– **Tear-off-mode** (only for fanfold paper)
There are three possible settings within this mode:
  – NO
  – YES 10 SEC.
  – YES 1 SEC.

The **NO** setting is to be used with critical forms which cannot handle the return movement of the paper.
With the **YES** setting the printer waits for one ore ten seconds and, unless further data is received, moves the paper to the first perforation after the text. Regardless of this setting, whenever changing from fanfold to another paper source, the printer will request the fanfold paper to be torn off before the paper is moved to the park position.

– **Pre-separation** (is used for the ASF cassettes only)
During normal printing, a sheet of paper is not inserted from an ASF cassette before the preceding sheet has been ejected. By selecting **PRE-SEPARATION = YES** the sheets follow each other more closely, thereby increasing the printer's throughput.

Main-Function INSTALLATION

– **Sub-Function INTERFACE**

  – **BUFFER**
  Buffer size in Kbyte. The maximum size is 16 Kbyte with an optional RAM extension up to 176 Kbyte.

  – **WORD LENGTH**
  Length of the data to be transferred; values are 7 or 8 bit.

  – **I/F TYPE** (Interface Type)
  the following types are available:
    – **PARALLEL**
    – **SERIAL RS232**
    – **PARALL./ RS232** (shared mode)
    – **PARALL./ RS422** (shared mode)

  In case the "shared mode" interface type is selected the printer switches automatically between the parallel and serial interfaces. The first data received at the port determine which interface port becomes active. The other interface port will be closed so that only one interface is active at a time (for detailed information see Appendix **A Interface Description**).

  The factory setting for the interface type are: Shared, 8 Kbyte Buffer, 8 bit word length, even parity bit, 9600 baud rate, DTR protocol and ignore CTS.

  – **BAUD RATE** (Only indicated if the serial interface is selected)
  Controls the speed of data transfer. The possible transfer rates are: 600, 1200, 2400, 4800, 9600 or 19200 bps.

  – **PARITY BIT** (Only indicated if the serial interface is selected)
  The data transfer will be checked by an even or odd parity bit. The values are: **EVEN**, **ODD**, **NONE** or **IGNORE**.

  – **PROTOCOL** (Only indicated if the serial interface is selected)
  Selectable are: **DTR**, **XON/XOFF**, **ACK/NAK**, or **ENQ/ETX/ACK**.

- **CTS MODUS** (Only indicated if the serial interface is selected)
  The input signal CTS (Clear To Send) of the RS232-C interface can be set to ignore. The printer will send immediately data to the system.

- **Sub-Function ADJUSTMENT**

  - **AGC Position**
    AGC (**A**utomatic **G**ap **C**ontrol) is an integral part of the paper handling capabilities of the printer. It is an automatic adjustment function which ensures an optimal print quality when using various paper thicknesses.
    The gap adjustment will automatically take place whenever paper is inserted
    - after the paper source has been changed
    - from park position (fanfold)
    - after Power On
    - after the printer has been in the STOP mode
    - an AGC command has been issued.

    The reference point for the measurement of the paper thickness is the **AGC Position** of the first print line. Default for the horizontal AGC Position is 24 (= ink ribbon exchange position), any position from 4 to 131 (at 10 cpi) can be selected.
    An adjustment of the AGC Position is only necessary if a measurement at the default position does not reflect the paper thickness of the area to be printed on or if there is a paper edge (e.g. of a label) in that position (the measuring process requires a plain paper-surface).
    In addition to the automatic AGC function, random measurements of the paper thickness can be invoked by the AGC command, or a specific platen gap can be set using the PCC command. This is to meet the requirements of forms with complex properties. For details see the Programmers Manual for the printer.

  - **Platen Gap**
    This adjustment is to be seen as a correctional offset to the platen gap set by the AGC (Automatic Gap Control) function or a PCC (Programmable Copy Control) command. It effects all paper paths.

    The offset is within the range of -3 to +4. One step is equal to 18 µm.
    "-" reduces the gap, "+" increases it.

  - **AGC Adjust**
    This is a basic adjustment which is automatically performed at the initial Power On of the printer, and which there after only needs to be initiated after having exchanged the print head or the platen. It is essential that the ink ribbon is installed and **no paper** is in the printer when this procedure is started. After activating this procedure, the printer displays
    INSTALL RIBBON. If the ribbon is installed press ⊘ to continue.

  - **PAPER-IN ADJ** (Paper-In-Sensor adjustment)
    This parameter logically adjusts the base position of the Run-In-Sensor. The factory set value is such that the default is set to compensate specific mechanical tolerances. The adjustment range is from -3 to +4 in $^{1}/_{60}$" steps (0.42 mm), where "**-**" means an upward movement and "**+**" a downward movement. When implemented, the adjustment applies to all paper paths.

- **CUTTING V-POS**
  This parameter can be used to compensate mechanical tolerances which may cause a misalignment between the perforation edge of a continuous form and the tear-off position..

  The range within which variations can be met is - $^{15}/_{60}$" to + $^{16}/_{60}$", where "-" is up the page and "+" is further down the page.

  The following table shows the possible values in inch and millimetres.

+/- 1	=	+/- $^{1}/_{60}$"	= +/- 0,42 mm	+/- 9	=	+/- $^{9}/_{60}$"	= +/- 3,81 mm
+/- 2	=	+/- $^{2}/_{60}$"	= +/- 0,85 mm	+/- 10	=	+/- $^{10}/_{60}$"	= +/- 4,23 mm
+/- 3	=	+/- $^{3}/_{60}$"	= +/- 1,27 mm	+/- 11	=	+/- $^{11}/_{60}$"	= +/- 4,66 mm
+/- 4	=	+/- $^{4}/_{60}$"	= +/- 1,69 mm	+/- 12	=	+/- $^{12}/_{60}$"	= +/- 5,08 mm
+/- 5	=	+/- $^{5}/_{60}$"	= +/- 2,12 mm	+/- 13	=	+/- $^{13}/_{60}$"	= +/- 5,50 mm
+/- 6	=	+/- $^{6}/_{60}$"	= +/- 2,54 mm	+/- 14	=	+/- $^{14}/_{60}$"	= +/- 5,93 mm
+/- 7	=	+/- $^{7}/_{60}$"	= +/- 2,96 mm	+/- 15	=	+/- $^{15}/_{60}$"	= +/- 6,35 mm
+/- 8	=	+/- $^{8}/_{60}$"	= +/- 3,39 mm	+ 16	=	+ $^{16}/_{60}$"	= + 6,77 mm

- **Uni-Direct.CMD**
  If **NO** is selected, commands for uni-directional printing will be ignored. The default setting of **YES** means that commands will be carried out to switch from bi-directional to uni-directional or vice versa.

- **TRACT.FF-MODE** (Tractor Form Feed Mode)
  BLANK PAGES means, every Form Feed sent to the printer will be executed.
  If you set **NO BLANK PAGES**, only a Form Feed before printable characters will be executed, that means blank pages will be ignored.

Special Sub-Items under INSTALLATION

- **Language**
  The operator panel may display its messages in three languages. Select one out of the following: **ENGLISH**, **DEUTSCH**, **FRANCAIS**.

- **RESTORE SET UP**
  With this function all settings of the last **SAVE** procedure will be restored.

- **RECALL FACTORY**
  All standard settings of the firmware will be restored. The contents of Page Counter and the Paper-in Adjust will not be changed. Use the function **SAVE** if the standard settings shall be active after power off/on.

- **Menu Access**
  There are four possibilities to define the access to the menu by the user.

  - **ALL FUNCTIONS** All functions can be used (default)

  - **QUICK SET. OFF** With this function the Quick Settings for Macro Selection, Vertical Position Adjustment, and Fanfold Displacement can be deactivated in the **READY** or **BUSY** mode. After pressing one of these keys the display shows shortly **LOCKED** (see also Chapter **2**).

  - **MACROS ONLY** - Macros can be selected using the Quick Macro Selection keys MENU , , a a / a a and abc / a b c .
    - The Vertical Positioning Adjustment Mode can be entered
    - The Fanfold Displacement Mode can be entered.

  - **NO ACCESS** The menu is not accessible at all.

  The menu function **PRINT OUT** can be activated regardless of the defined menu access.

Note: Only the system manager is able to reset the functions **MACROS ONLY** and **NO ACCESS** (look at the red page at the end of this book).

- **Self Test**
  - **PRINT TEST 1** (see Chapter **1.10 Test Printouts**)
  - **PRINT TEST 2** (see Chapter **1.10 Test Printouts**)
  - **PRINT TEST 3** gives information about technical releases and is intended for service purposes only. Among other information, the page counter identifies the number of pages printed.
  - **I/F Test** This function is used to test the serial interface. It enables test data to be sent out from the printer and returned by means of a closed loop connector plugged into the serial interface connector. The test data used consists of **PRINT TEST 1**.

- **Hex Dump**
  This function makes it possible that the data received by the printer can be analyzed. Control codes are no longer carried out, instead all data is printed in hexadecimal format and as ASCII characters. Any non-printable characters, such as carriage return are only represented as a single dot (**.**) in the ASCII list.

  It may happen that the transmission of data to the printer will be interrupted during Hex Dump. In this case, printing of data received after the break is started on the next available line. The result is an irregular right margin which is not an indicator for any loss of data.

```
MENU ==> [MACRO SELECT          →]   ) ,  [← MACRO 1            ]
              ⇓                     *   [← MACRO 2            ]
              *                     *   [← MACRO 3            ]
              *                     . )  [← MACRO 4            *]
              ⇑
         [CHANGE MACRO #      →]   ) ) )  [← FONT                →]   ) ) )  [← DATA                  *]   <== a a / a a
         (# indicates the actually selected                                   [← ROMAN          LQ/NLQ ]   )
          macro, e.g. CHANGE MACRO 1)                                         [← SAN SERIF      LQ/NLQ ]   ,
              ⇓                                                               [← COURIER        LQ/NLQ ]   ,
              *                                                               [← RESTIGE        LQ/NLQ ]   } Dependent on
              *                                                               [← SCRIPT         LQ/NLQ ]   } PRINT QUALITY
              *                                                               [← OCR B          LQ/NLQ ]   , LQ or NLQ
              *                                                               [← OCR A          LQ/NLQ ]   ,
              *                                                               [← ORATOR-C       LQ/NLQ ]   ,
              *                                                               [← ORATOR         LQ/NLQ ]   )
              *                                                               [← DATA LARGE            ]
              *
              *                      [← PRINT QUALITY    →]   ) ) )  [← LQ                    *]
              *                                                      [← NLQ                     ]
              *
              *                      [← SUB/SUPER FONT   →]   ) ) )  [← NO                    *]   (Macro 1)
              *                                                      [← YES                     ]   (Macro 2, 3, 4)
              *
              *
              *                      [← PITCH            →]   ) ) )  [← 10 CPI                *]   <== abc / a b c
              *                                                      [← 12 CPI                  ]
              *                                                      [← 15 CPI                  ]
              *                                                      [← 17 CPI                  ]
              *                                                      [← 18 CPI                  ]
              *                                                      [← 20 CPI                  ]
              *                                                      [← PROPORTIONAL            ]
              *
```



```
              *
              *                      [← LINE             →]   ) ,  [←  2 LPI                  ]
              *                                                *   [←  3 LPI                  ]
              *                                                *   [←  4 LPI                  ]
              *                                                . )  [←  6 LPI                 *]
              *                                                     [←  8 LPI                  ]
              *                                                     [← 12 LPI                  ]
              *
              *                      [← PAGE LENGTH      →]   ) ) )  [← 72 LINES               *]
              *                                                      (tractor only; range: 5 up to 132 lines)
              *
              *                      [← VERT.POS.JUST.   →]   ) ) )  [← TRACTOR V-POS        →]   ) )  [← TRACTOR V          0 *]
              *                                                                                          (range: -15 ... +240)
              *                                                      [← MANUAL V-POS         →]        [← MANUAL V           0 *]
              *                                                                                          (range: -15 ... +16)
              *                                                      [← BIN 1  V-POS         →]        [← BIN 1   V          0 *]
              *                                                                                          (range: -15 ... +16)
              *                                                      [← BIN 2  V-POS         →]        [← BIN 2   V          0 *]
              *                                                                                          (range: -15 bis +16)
              *                                                      [← BIN 3  V-POS         →]        [← BIN 3   V          0 *]
              *                                                                                          (range: -15 bis +16)
              *
              *                      [← LEFT MARGIN      →]   ) ) )  [← 1. COLUMNS            *]
              *                                                      (range: 1 .. 16 columns)
              *
              *
              *                      [← RIGHT MARGIN     →]   ) ,  [←  80 COLUMNS             ]
              *                                                *   [← 132 COLUMNS             ]
              *                                                . )  [← 136 COLUMNS            *]
              *
              *                      [← TOP MARGIN       →]   ) ) )  [← 1 LINES               *]
              *                                                      (range: 1 ... 16 lines)
              *
              *                      [← BOTTOM MARGIN    →]   ) ) )  [← 1 LINES               *]
              *                                                      (range: 1...8 lines)
              *
```

```
*                    *
*                    [← PERF. SKIP        ¬]   ) ) )  [← YES                  *]
*                    *                                [← NO                   ]
*                    *
*                    [← PAPER SOURCE      ¬]   ) ) )  [← TRACTOR              *]
*                    *                                [← MANUAL               ]
*                    *                                [← BIN 1                ]
*                    *                                [← BIN 2                ]
*                    *                                [← BIN 3                ]
*                    *                                [← BINS 1/2   (pools)   ]
*                    *                                [← BINS 2/3   (pools)   ]
*                    *                                [← BINS 1/2/3 (pools)   ]
*                    *
*                    [← PAPER EXIT        ¬]   ) ) )  [← STACKER              *]
*                    *                                [← FRONT SIDE/KEY       ]   (with START/STOP Key)
*                    *                                [← FRONT SIDE           ]   (without START/STOP Key)
*                    *
*                    [← EMULATION         ¬]   ) ) )  [← EPSON LQ             ]   (Macro 1)
*                    *                                [← IBM PROPR.           ]   (Macro 2)
*                    *                                [← IBM PROPR. AGM       ]   (Macro 3)
*                    *                                [← EPSON LQ             ]   (Macro 4)
*                    *
```

```
*                    *
*                    [← CHARACTER SET     ¬]   ) ) )  [← IBM SET 1            ¬]   ) )  [← 1: U.S.A.          *]
*                    *                                        ⇓                          [← 2: FRANCE           ]
*                    *                                        *                          [← 3: GERMANY          ]
*                    *                                        *                          [← 4: U.K.             ]
*                    *                                        *                          [← 5: DENMARK          ]
*                    *                                        *                          [← 6: SWEDEN           ]
*                    *                                        *                          [← 7: ITALY            ]
*                    *                                        *                          [← 8: SPAIN            ]
*                    *                                        *                          [← 9: JAPAN            ]
*                    *                                        *                          [← 10: NORWAY          ]
*                    *                                        *                          [← 11: DENMARK 2       ]
*                    *                                        *                          [← 12: SPAIN 2         ]
*                    *                                        *                          [← 13: LATIN AM.       ]
*                    *                                        *                          [← 14: TURKEY          ]
*                    *                                        *
*                    *                                [← IBM SET 2            ¬]   )    [← 1: U.S.A.          *]
*                    *                                        ⇓                          [← 2: FRANCE           ]
*                    *                                        *                          [← 3: GERMANY          ]
*                    *                                        *                          [← 4: U.K.             ]
*                    *                                        *                          [← 5: DENMARK          ]
*                    *                                        *                          [← 6: SWEDEN           ]
*                    *                                        *                          [← 7: ITALY            ]
*                    *                                        *                          [← 8: SPAIN            ]
*                    *                                        *                          [← 9: JAPAN            ]
*                    *                                        *                          [← 10: NORWAY          ]
*                    *                                        *                          [← 11: DENMARK 2       ]
*                    *                                        *                          [← 12: SPAIN 2         ]
*                    *                                        *                          [← 13: LATIN AM.       ]
*                    *                                        *                          [← 14: TURKEY          ]
*                    *                                        *
*                    *                                        *
*                    *                                        *
```

```
*                    *                    *
*                    *          [← IBM CODE PAGE        →]   ) ) [← 1: PAGE 437          *]
*                    *                    *                        [← 2: PAGE 850           ]
*                    *                    *                        [← 3: PAGE 860           ]
*                    *                    *                        [← 4: PAGE 863           ]
*                    *                    *                        [← 5: PAGE 865           ]
*                    *                    *                        [← 6: PAGE 858           ]
*                    *                    ⇑
*                    *          [← EPSON EXT. GCT       →]   ) ) [← 1: U.S.A.            *]
*                    *                    *                        [← 2: FRANCE             ]
*                    *                    *                        [← 3: GERMANY            ]
*                    *                    *                        [← 4: U.K.               ]
*                    *                    *                        [← 5: DENMARK            ]
*                    *                    *                        [← 6: SWEDEN             ]
*                    *                    *                        [← 7: ITALY              ]
*                    *                    *                        [← 8: SPAIN              ]
*                    *                    *                        [← 9: JAPAN              ]
*                    *                    *                        [← 10: NORWAY            ]
*                    *                    *                        [← 11: DENMARK 2         ]
*                    *                    *                        [← 12: SPAIN 2           ]
*                    *                    *                        [← 13: LATIN AM.         ]
*                    *                    *                        [← 14: TURKEY            ]
*                    *                    *                        [← 15: LEGAL             ]
*                    *                    *
```



```
                                         ⇑
*                    *
*                    *          [← CODE PAGE EE         →]   ) ) [← 1: CP 437 GK         ]
*                    *                                           [← 2: CP 851 GK         ]
*                    *                                           [← 3: CP 928 GK         ]
*                    *                                           [← 4: CP 855 CYRI       ]
*                    *                                           [← 5: CP 866            ]
*                    *                                           [← 6: CP 869            ]
*                    *                                           [← 7: CP 852            ]
*                    *                                           [← 8: KAMENICKY         ]
*                    *                                           [← 9: ISO LATIN 2       ]
*                    *                                           [← 10: MAZOVIA          ]
*                    *                                           [← 11: CP 437 HUN       ]
*                    *                                           [← 12: CP 852 SEE       ]
*                    *                                           [← 13: CP 866 LAT       ]
*                    *                                           [← 14: WIN LAT 2        ]
*                    *
*                    *
*          [← LINE MODE            →]   ) ) )  [← LF=LF, CR=CR          *]
*                    *                         [← LF=LF+CR              ]
*                    *                         [← CR=LF+CR              ]
*                    *                         [← LF, CR=LF+CR          ]
*                    *
*          [← $$ COMMAND           →]   ) ) )  [← NO                    *]
*                    *                         [← YES                   ]
*                    *
*                    *
*          [← TEAR-OFF-MODE        →]   ) ) )  [← NO                    *]
*                    *                         [← YES 10 SEC.           ]
*                    *                         [← YES  1 SEC.           ]
*                    *                         [← NO SPECIAL            ]
*                    ⇑
*          [← PRE-SEPARATION       →]   ) ,    [← YES                   ]   (bins 1 ... 3 only)
*                                       . )   [← NO                    *]
*
```

```
        ⇑
[INSTALLATION        ¬]  ) ) )  [← INTERFACE        ¬]  ) ) )  [← BUFFER              ¬]  ,  [←  1 KBYTE          ]
        ⇓                       ⇓                                ⇓                        .  [←  8 KBYTE          *]
        *                       *                                *                           [← 16 KBYTE          ]
        *                       *                                *                           [← 32 KBYTE          ]
        *                       *                                *                           [← 48 KBYTE          ]
        *                       *                                *
        *                       *                                [← WORD LENGTH        ¬]  ,  [← 7 BIT             ]
        *                       *                                *                        .  [← 8 BIT             *]
        *                       *                                *
        *                       *                                [← I/F TYPE           ¬]  ,  [← PARALLEL          ]
        *                       *                                *                        *  [← SERIAL            ]
        *                       *                                *                        .  [← SHARED            *]
        *                       *                                *
        *                       *                          2)    [← BAUD RATE          ¬]  ,  [←   600 BPS         ]
        *                       *                                *                        *  [←  1200 BPS         ]
        *                       *                                *                        *  [←  2400 BPS         ]
        *                       *                                *                        *  [←  4800 BPS         ]
        *                       *                                *                        .  [←  9600 BPS         *]
        *                       *                                *                           [← 19200 BPS         ]
        *                       *                                *
        *                       *                          2)    [← PARITY BIT         ¬]  ) ) [← EVEN             *]
        *                       *                                *                           [← ODD               ]
        *                       *                                *                           [← NONE              ]
        *                       *                                *                           [← IGNORE            ]
        *                       *                                *
        *                       *                          2)    [← PROTOCOL           ¬]  ) ) [← DTR              *]
        *                       *                                *                           [← XON/XOFF          ]
        *                       *                                *                           [← XON/XOFF+DTR      ]
        *                       *                                ⇑
        *                       *                          2)    [← CTS MODE           ¬]  ) ) [← CTS IGNORE       *]
        *                       *                                                            [← CTS ACTIV         ]
        *                       *                          2) only indicated if SERIAL is selected
        *                       *
```



```
        *                       [← ADJUSTMENT        ¬]  ) ) )  [← AGC POSITION        ¬]  ) ) [← POSITION 24      *]
        *                       *                               ⇓                            (range: 4 ... 131)
        *                       *                               *
        *                       *                               [←PLATEN GAP          ¬]  ) ) [← PLATEN GAP 0     *]
        *                       *                               *                            (range: -3 ... +4)
        *                       *                               *
        *                       *                               [← AGC ADJUST         ¬]  ) ) [← NO               *]
        *                       *                               *                            [← YES               ]
        *                       *                          (parameter [YES] gives the message [INSTALL RIBBON] ;
        *                       *                           after check press ▽ )
        *                       *                               *
        *                       *                               [← PAPER-IN ADJUST.   ¬]  ) ) [← PAPER-IN        0  *]
        *                       *                               *                            (range -3 ... +4)
        *                       *                               *
        *                       *                               [← CUTTING V-POS      ¬]  ) ) [← CUTTER  V     0  *]
        *                       *                               *                            (range -15 ... +16)
        *                       *                               *
        *                       *                               [← UNI-DIRECT.CMD     ¬]  ) ) [← YES              *]
        *                       *                               *                            [← NO                ]
        *                       *                               *
        *                       *                               ⇑
        *                       *                               [← TRAKT. FF-MODE     ¬]  ) ) [← NO BLANK PAGES   *]
        *                       *                                                            [← BLANK PAGES       ]
        *                       *
        *                       [← LANGUAGE          ¬]  ) ) )  [← ENGLISH                *]
        *                       *                               [← DEUTSCH                ]
        *                       *                               [← FRANCAIS               ]
        *                       *
        *                       [← RESTORE SET UP    ¬]  ) ) )  [← NO                     *]
        *                       *                               [← YES                    ]
        *                       *
        *                       [← RECALL FACTORY    ¬]  ) ) )  [← NO                     *]
        *                       *                               [← YES                    ]
        *                       *
```

```
          *                                *
          *                  [← MENU ACCESS        →]   ) ) )  [← ALL FUNCTIONS          *]
          *                                *                   [← QUICK SET OFF           ]
          *                                *                   [← MACROS ONLY             ]
          *                                *                   [← NO ACCESS               ]
          *                                *
          *                  [← SELF TEST          →]   ) ) )  [← PRINT TEST 1            ]
          *                                *                   [← PRINT TEST 2            ]
          *                                *                   [← PRINT TEST 3            ]
          *                                *                   [← I/FTEST                 ]   (only with a closed
                                                                                               loop connector plug)
          *                                ⇑
          *                  [← HEX DUMP           →]   ) ) )  [← HEX DUMP                ]
          *
          *
          ⇑
[SAVE                    →]   ) ) )  [← SAVING NOW          ]
          ⇓
          *
          *
          ⇑
[PRINT OUT               →]   ) ) )  [← PRINT OUT           ]
```

4. Maintenance

Preferred Materials

The following materials and cleaning lubricants are recommended for use in the maintenance procedure:

- Lint-free cloth
- Platen Cleaner C/CP09, commercial no: 8709 004 10931
- Vacuum cleaner.

4.1 Cleaning the Platen and Surrounding Areas

The user should clean the printer every six months or after 50,000 prints, whichever occurs first. If you experience paper feed problems, or if the print head carriage movement becomes restricted, cleaning should be carried out more often.

Note: the Page Counter (**PGCNT**) in the **PRINT-TEST 3** will give you information about actual number of printed pages.

PRINT TEST3

```
CONFIGURATION

PM1   20808xxx   PM2    00000000   PM3   20807483   PBC      20807xxx
SPC   20807402   MC     00000000   CUR          4   PMR             0
MCR          0

NFQ       1800   DSF         100   GSF         70   NTF           240
TNA1       230   TNA2        260   TNA3       260   CAC          3.10
PTC1      2.75   PTC2       2.85   PTDT         5   PHCS1        2.20
PHCS2     1.00   PGC          30   PGCNT      333   SBP            25

C061 IBM SET 1          C062 IBM SET 2          C063 IBM CODE PAGE
C071 EPSON EXT. GCT     C100 CODE PAGES EE      C091 BARCODE

DATA                    ROMAN            NLQ    ROMAN             LQ
SAN SERIF        NLQ    SAN SERIF         LQ    COURIER          NLQ
COURIER           LQ    PRESTIGE         NLQ    PRESTIGE          LQ
SCRIPT           NLQ    SCRIPT            LQ    OCR B             LQ
OCR A             LQ    ORATOR-C         NLQ    ORATOR-C          LQ
ORATOR           NLQ    ORATOR            LQ    DATA LARGE

CHARACTER SET  :   EPSON EXT. GCT            3: GERMANY

AGC TEST      AGC TEST       AGC TEST      AGC TEST       AGC TEST
```

PRINTHEAD NEEDLE

```
1  2  3  4  5  6  7  8  9  10 11 12 13 14 15 16 17 18 19 20 21 22 23 24
```

DATA
!"#$%&'()*+,-./01234567890:;<=>?.....
.
.

Note: The number following **PM1** identifies the micro program and the number following **PM3** identifies the character set.

4.2 Cleaning Procedure

1. Power the printer ON and remove the top cover.
2. Remove the ribbon cassette.
3. Thoroughly brush and vacuum all accessible areas to remove any paper flock and dust.
4. Clean the platen's surface, the paper pressure rollers and the transport rollers using the platen cleaner. In order to access the transport rollers loosen the green screws and remove the metal bar with the metal rollers.
5. Clean the covers and the operator panel with a damp, lint-free cloth. Do not use cleaning solvents or excessive amounts of water.
6. Insert the ribbon cassette (see Chapter **1.5 Installing the Ribbon Cassette**).
7. Remount the top cover.

4.3 User Replaceable Parts

Replacement of the Print Head

The print head has an expected life time of approximately 350,000 pages (see Page Counter (**PGCNT** in **PRINT TEST 3**).

Print Head Removal

Caution: The print head may be very hot immediately after printing.

1. Remove the top cover

2. Switch the printer ON, lift and remove the top cover. The print head will move to the correct position, aligned with the cut-out in the paper guide plate

3. Switch the printer OFF again

4. Remove the ribbon cassette (3)

5. Disconnect the print head cable (4)

6. Using the supplied tool (7), loosen the two captive screws (6) retaining the print head (5). Use the enclosed plastic case as an extension for the socket head cap key

7. Remove the print head (5).

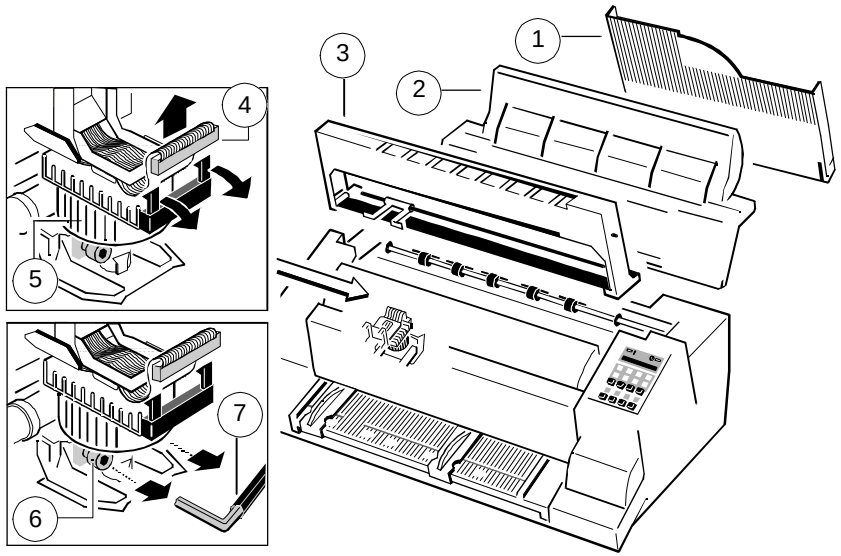

Print Head Installation

Ensure that the printer is switched **OFF**. For print head installation, the carriage should be aligned with the cut-out in the paper guide plate (same position as for removal procedure).

1. Hold the print head (5) in its mounting position and press it against its stop in direction of the platen. The two noses (9) of the adjustment guide (8) support this procedure.

2. Fasten the captive screws (6):
   - fasten the right screw to its stop
   - tighten the left screw
   - now tighten the right screw
   - put the enclosed plastic case onto the socket head cap key and first tighten the right and then the left screw.

3. Reconnect the print head cable (4) and fasten it.

4. Mount and close the top cover.

5. Switch the printer ON, open the top cover after the message **READY 4 ELQ**, and insert the ink ribbon cassette.

6. Run the MENU-function **AGC ADJUST** with ribbon cassette installed but <u>without</u> any paper inserted in the printer.

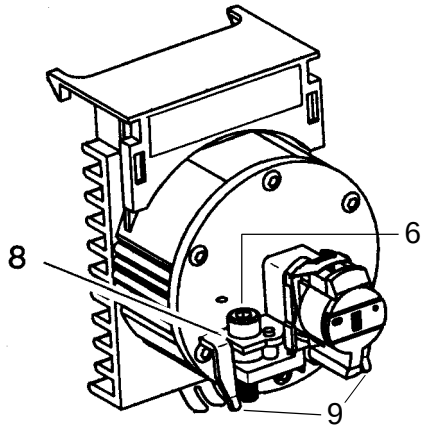

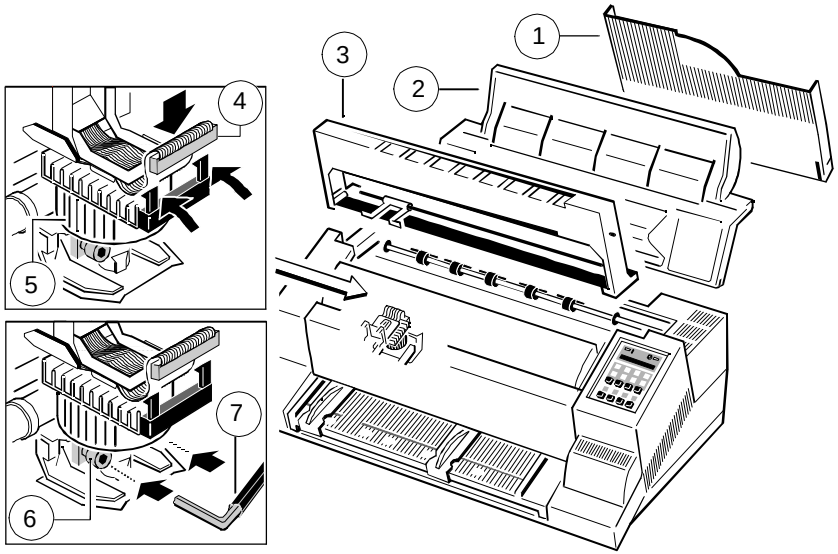

Replacement of the Platen

The platen needs to be replaced after approximately 800,000 pages (see Page Counter (**PGCNT**) in **PRINT TEST 3**).

To Remove the Platen (61)

1. Remove the output stacker
2. Lift and remove the top cover
3. Remove the ribbon cassette
4. Switch the printer OFF
5. Position the print head to the very right.
6. Release the green plastic platen clamp (1) on the left platen mounting.
7. Move platen (2) approximately 10 mm to the left, lift the left end of the platen free off its mounting and withdraw the platen from the right mounting.
8. Lift the platen to the left underneath the print head and take it out.

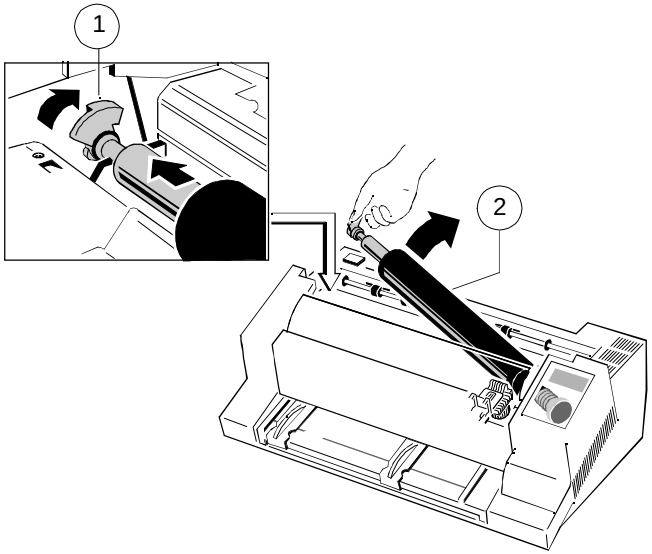

To Install the Platen

Ensure that the printer is switched OFF.

1. Place platen (2) in the vacant space between print head and metal bar.
2. Move print head from its right hand position into the centre.
3. Fit the gear wheel end of the platen into the right hand side mounting. Be careful not to damage the gear wheel.
4. Ensure that the plastic platen clamp (1) is in the upright position, push the platen in to its mounting and lock in position by pushing the tag on the clamp to the rear.
5. Install the ribbon cassette.
6. Fit and close the top cover.
7. Fit the output stacker.
8. Run the MENU-function **AGC ADJUST** with ink ribbon cassette installed but no paper inserted.

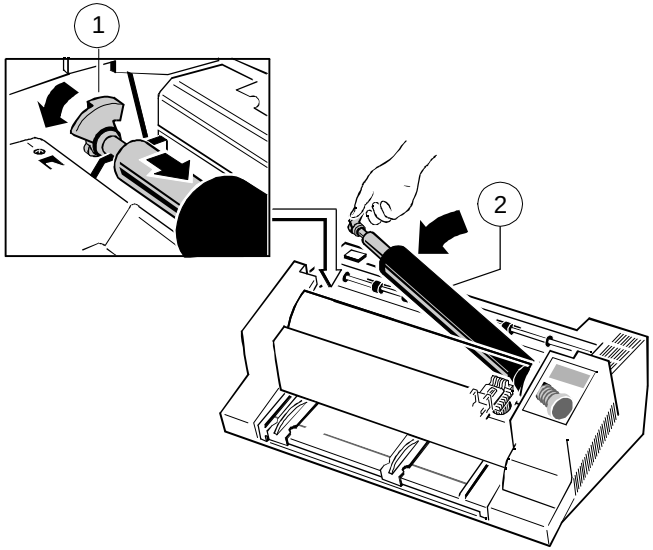

5 Troubleshooting and Diagnostics

How to Use This Section

1. Find the category in which your problem occurs. The problem categories are:
   - Power-related Problems
   - Error Messages
   - No Printout
   - Operation-related Problems
   - Print-related Problems
   - Ribbon or Carriage-related Problems

For example, if the print appears very light on the paper, look at Section "**Print-related Problems**".

2. Find the symptom description that most closely matches the printer symptom. In this example you would look at the symptom **"Print faint or of poor quality."**
3. Try the first suggestion under that heading.
4. If the suggestion does not cure the problem, try the next suggestion.
5. If none of the suggestions enable you to continue printing, or if the fault is not listed, contact your service office.

Each time the printer is switched ON the display indicates TEST while the internal self-tests are run. If the test is completed successfully **READY 4 ELQ** will be displayed. If an error message is displayed please refer to the following section. All other messages on the display are described in section 2.4 **Status and Error Messages.**

5.1 Power-related Problems

- Power indicator does not come On when power is switched On
- Check that the power cord and plug are securely fitted to the printer and to an electrical outlet.
- Ask for the power connector connections (and fuse, if fitted) to be verified.
- Ask for the building electrical supply to be verified.

5.2 Error Messages

After switching the power ON the printer runs a self test. During the test the following messages may be shown on the display:

Display	That means ...	Cause / Action
No information, POWER ON indicator not lit.	No power	- Mains cable not connected
green and yellow LED give light but no reaction	hang up in reset after power on	- Print PSU defective - Print CU-DEV defective
########	Firmware does not work	- PM not inserted - PM not correctly inserted - no firmware on PM - PROMs not correctly installed
TEST.... (flashing)	Initializing of the EEPROM	- After first POWER ON with PM - Change of the PM - Contents of the EEPROM faulty
I/O OK	EEPROM located on the Control Unit not addressable	EEPROM - not installed - not correctly installed - defective

Display	That means ...	Cause / Action
NV RAM OK	Error on the RAM of the Control Unit	- Control Unit defective
RAM OK	Checksum error (P)ROM 1	- (P)ROM defective
ROM 1 OK	No Fonts available	- Character generator P(ROM) on PM damaged or missing
ROM 2 OK	RAM on Memory Card damaged	- Memory Card defective
MC OK	Fault on Control Unit	- Control Unit defective - Type mismatch of PM and Control Unit - PBC (Printer Base Controller) on Control Unit damaged - SPC (Speed Controller) on Control Unit damaged - Transport lock not removed

If all tests have been passed successfully the following message will be displayed:

Display	That means...	Cause / Action
READY/BUSY	The Printer is OK	- Printer ready for operation

During normal operation the following error messages may occur (for further operator panel messages please refer to section 2.4 **Status and Error Messages**):

Display	That means...	Cause / Action
AGC ERROR	AGC ADJUST procedure fault	- Distance print head and platen faulty - Print head loose - Platen incorrectly installed - Ribbon not inserted - Horizontal drive without function - Platen got dirty
HOR. DRIVE ERROR	Horizontal drive without function	- Horizontal drive blocked - Paper jam - Distance of platen gap too narrow - AGC procedure on not workable position - Platen incorrectly installed - No AGC ADJUST after print head or platen replacement - Device electronic fault - Encoder strip missing - Horizontal drive fault
BUFFER OVERFLOW	Handshake protocol error	- Check CTR - CTS or XON - XOFF protocol - Repeat data transfer
PARITY ERROR	Protocol error	- Check protocol setting of printer and host - Repeat data transfer

FRAMING ERROR	Protocol error	- Check protocol setting of printer and host - Repeat data transfer

5.3 No Printout

- **Self-test printout does not start**
  - Make sure that you have closed the cover.
  - Check if paper is loaded in the printer.
  - Refer to section 1.10 **Test Printouts**.

- **Printing does not start**
  - Make sure that the **READY** or **BUSY** message is displayed. If there is a different message displayed please refer to the above error message table or to section **2.4 Status and Error Messages**.
  - Make sure that the printer is connected to the host computer. (Refer to Section 1.11 **Connection to a Computer**). Make sure that connectors are properly fixed at both ends.
  - Make sure that the printer is receiving data from the host computer.
  - Make sure that the correct protocol is enabled. (Refer to section 3.2 **Standard Configuration** and Appendix **A Interface Description**)
  - Make sure that you have selected the correct port (if the automatic feature has not been selected).
  - Make sure that paper is loaded.
  - Make sure that the ribbon is installed.
  - Examine the ribbon path. Does the ribbon pass in front of the whole printhead? Adjust the ribbon if necessary.

- **Fanfold paper does not advance**
  - Make sure that the fanfold paper source tractor is selected.

- **Single sheet paper does not advance**
  - Make sure that the paper source **MANUAL** or **BIN x** (x = 1 up to 3) is selected.

5.4 Operation-related Problems

- **Paper is not positioned at perforation for tear-off feature**
  - Select the correct form length using the Set-up feature.
  - Reset top of form by performing a Parking function.
  - Refer to section 3.4 **Vertical Positioning Adjustment**

- **Paper tears or jams**
  - Examine the paper path; remove any obstructions
  - Is the paper too loose or too taut between the tractors?
    If the holes in the paper are deformed at their outer edges, the paper is too taut.
    If the paper rises between the tractors, it is too loose.
    Readjust the tractor spacing so that the paper lies smoothly but without any tension.
    Ensure that the paper is horizontally aligned on the pins.
  - Open the printer's top cover. If necessary, loosen the two green screws and remove the paper guide plate to gain access to the paper.

- **Parking paper and resetting top of form**
  - Tear off the paper at the perforation line.
  - Press .
  - Press until the paper is in the park position.
  - Press . Printing will resume at the top of the next form.

- **Print head carriage does not move smoothly/does not move at all**
  - Examine the paper pathway. Remove any obstructions.
  - Examine the carriage area for obstructions. Remove, where necessary. Press the key when the paper pathway is cleared.
  - Make sure that the transport lock has been removed.

- **Single sheets are skewed**
  - Adjust ASF cassette paper guides.
  - More information you will find in the enclosed references of the ASF cassette.

5.5 Print-related Problems

- **Print faint or of poor quality.**
  - Have you used the correct paper? See Chapter **7 Technical Data** which contains a full specification of the paper you can use. Replace the paper if it does not match the specification.
  - Make sure that the ribbon is stretched correctly.
  - Does the ribbon need changing? Replace it with a new ribbon if necessary.
  - Is the ribbon cartridge properly installed? Adjust as necessary.

- **Characters do not print evenly or are not uniform in pitch**
  - Examine the paper pathway for dirt or other obstruction that may cause the gap between print head and platen to vary. Remove the obstruction.

- **Print lines overlap**
  - Examine the paper pathway for dirt or other obstructions that may prevent the platen from rotating freely. Remove the obstruction.

- **On preprinted forms, the printing on the copies is not aligned with the preprinted matter**
  - Refer to section **3.4. Vertical Positioning (VERT.POS.ADJ.)**

- **Part of printed text is missing (loss of data)**
  - If you are using Serial communications check the buffer control setting in Set-up.
  - Check the data flow control setting on the host computer.

- **Font cartridge has been installed, but the printer is still using internal fonts**
  - Switch the power OFF and check that the font cartridge has been correctly inserted.
  - Check that the font cartridge has been selected in the printer Set-up (see **Appendix B**).

If the printout or the character set is not ok, the following procedure can help to clear the situation.

Action	Result	Check
Select and start PRINT TEST 1	Print not OK?	- PAPER SOURCE selection - Ribbon tension and condition - Print head condition
Stop SELF TEST and start external printing	No printing starts	- Printer ONLINE READY - Interface cable for proper connection - Interface selection
	Some characters not correct	- Emulation - Character set - National version - Word length - Baud rate - Parity bit - Protocol
	Font and pitch quality fault	- Font - Pitch - Line space
	Problem still there?	- Call service

5.6 Ribbon or Carriage-related Problems

- **Ribbon Problems**
  - Make sure that the ribbon is:
    - Stretched correctly
    - Not worn thin or dry
    - Not torn or damaged in any other way
    - Not jammed

- **Carriage does not move smoothly**
  - Examine the paper pathway. Remove any obstructions. Check that all packing material is removed.
  - Examine the carriage area for obstructions. Remove where necessary.

5.7 Print Tests

There are three different print tests as well as one interface test built into the printer.

- **I/F TEST** is used to test the serial interface. It initiates data to be sent from the printer and be returned by means of a closed loop connector plugged into the serial interface connector. The test data used consists of **PRINT TEST 1**

Note: Detailed information about the print tests you will find in chapter 1.10 **Print Tests**.

6. Colour Option

6.1 Installing the Colour Option

The visual appearance of any printout can be enhanced by using the colour option in combination with a 4-colour ink ribbon.

When colour printing is not required it is recommended to use a black ribbon in order to increase the lifetime of the colour ribbon. The colour option does not have to be removed when printing with a black ribbon.

To Install the Colour Option

- Switch the printer ON
- Lift the top cover (2) as shown in the illustration.
- Remove the black ink ribbon cassette (11).
- Switch the printer OFF.

Caution: The print head may be very hot immediately after printing.

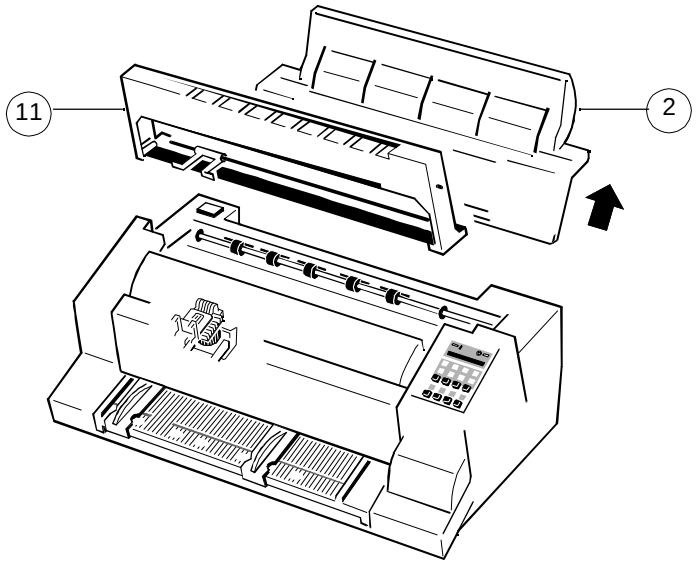

The mounting of the colour option is best done from the rear of the printer.

- Move the print head to a centre position.
- Remove the connection plug (40) out of the plastic shaft (39) which is holding down the string of cables leading to the print head.
- Insert the blue plug (40) into the connector socket (41) of the colour option.

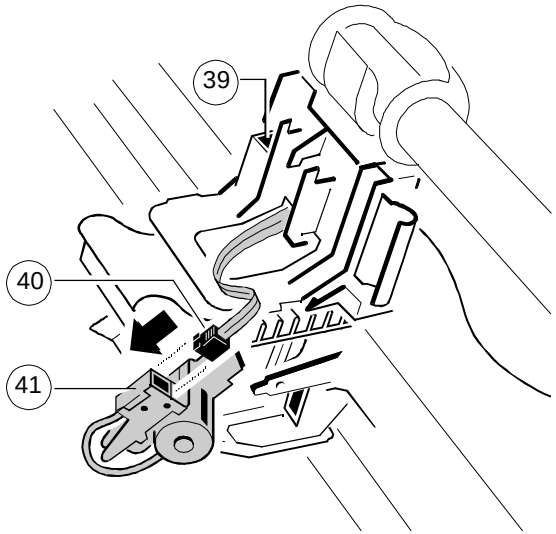

- Hold the colour option as illustrated below:

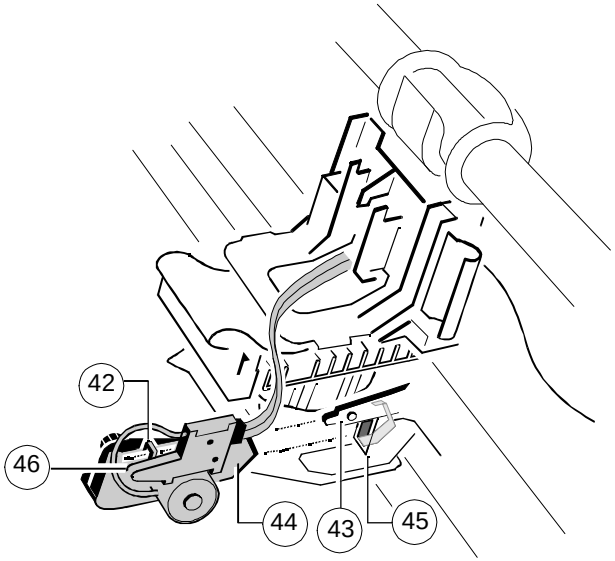

- Mount the colour option on to the print head carriage in such a way that the pointed edge (44) fits into the slot (45) and the hole (42) fits onto the pin (43). Press it firmly in position until the spring clip (46) engages.

- Tuck the cable (47) behind the plastic clip (48) and under the plastic fixture (65) to avoid the cable coming in contact with the moving horizontal belt (49) or the mounted ink ribbon cassette.

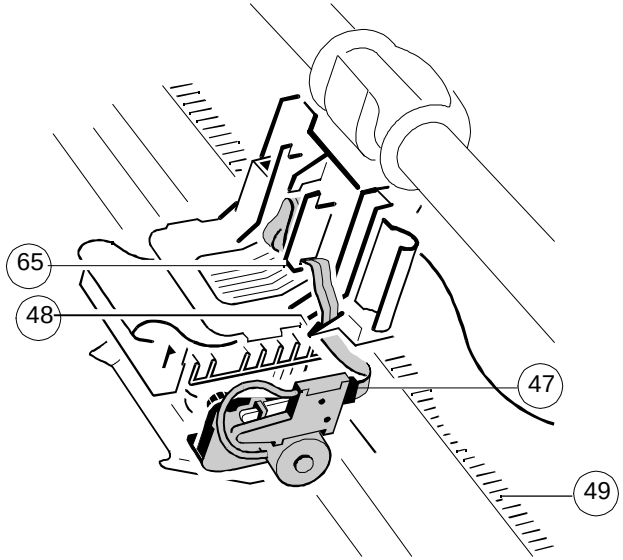

- Replace the printer's top cover.

- Switch the printer ON.

6.2 Installing the 4-Colour Ribbon

The printer must be turned ON.

- Remove any excess slack by turning the adjuster (54) clockwise.
- Align the green ribbon feed guide (53) with the arrow on the left side of the plastic cover of the cartridge.

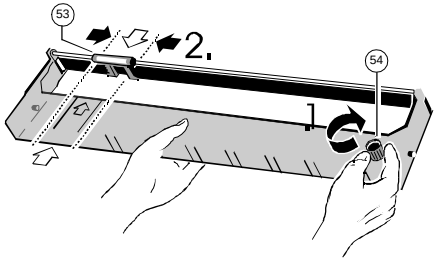

- Engage the upper pins (55) of the ink ribbon cartridge in the green guides at the side (56). In this position the ribbon can be swung down.

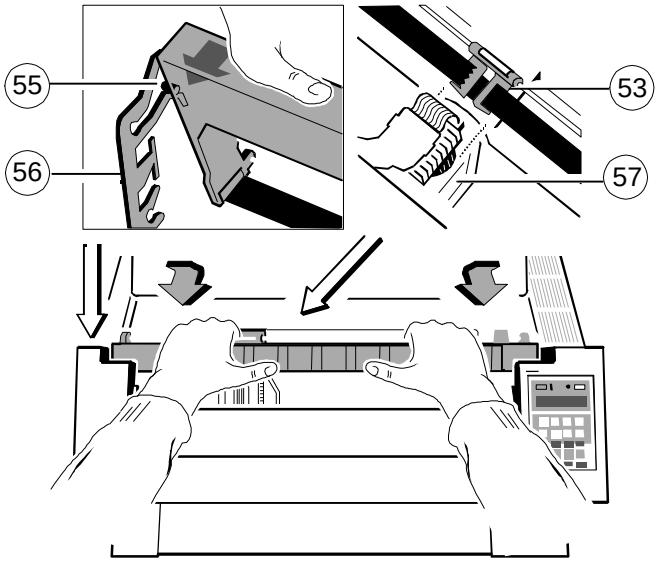

- Position the ribbon feed guide (53) between the print head (57) and the protective shield. This swings the cartridge down until the teeth of the green ribbon feed guide engage in the cog wheel of the colour feature.

Note: **If the ribbon is kept constantly taut while being swung into position it is particularly easy to thread it between print head and platen.**

"click !"

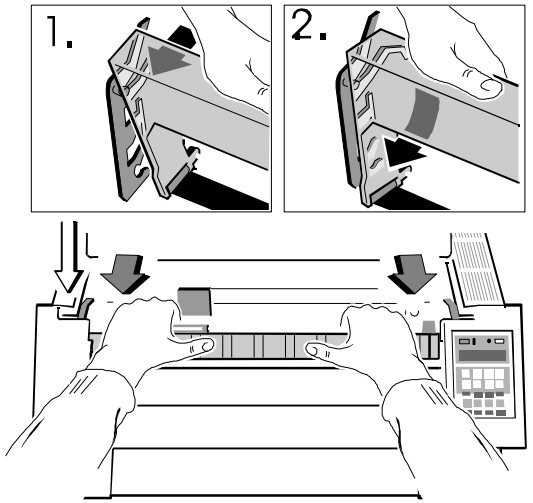

Note: **Contrary to the black ribbon cassette, the colour ribbon cassette has a straight position!**

7. Technical Data

The following technical data refers to the standard Personality Module PM SER/PAR.

Print head technology
Serial Impact Dot Matrix (SIDM) technology.

Paper path
Flat bed technology.

Print head
24 needles, needle diameter 0.25 mm (0.01 inch), lifetime approximately 350,000 pages (standard DIN letter)

Fonts
Data, Letter Gothic, Letter Gothic Italic, Courier, Micro, Orator, Orator-C, Roman, Prestige, Script, OCR A, OCR B, DATA BLOCK, DATA LARGE; all fonts (except Data, DATA BLOCK and DATA LARGE) in Letter Quality (LQ) and Near Letter Quality (NLQ). OCR A, OCR B only in LQ.

Character Attributes
Bold, double strike, italic, underline, double underline, overline, strike through, sub/superscript, double/triple height, double/triple width, double/triple/quadruple size, condensed.

Character Pitch
Standard character pitches are: 10, 12, 15, 17, 18, 20 cpi and proportional. In addition, commands are defined to select non-standard character pitches. It is also possible to print overlapped characters. Fonts will be compressed if smaller pitches are selected.

Emulations
- IBM® 4207 Proprinter XL24 (AGM)
- EPSON® LQ 1060/2550 / ESC/P2
- Philips GP 310/490

Print Speed (at 10 cpi)
- Draft Quality 600 cps,
- Near Letter Quality 300 cps,
- Letter Quality 150 cps*.

Throughput acc. to ECMA-132
Standard Letter (Dr. Grauert)

a) Sinlgle Sheet
Draft Quality: 490 pages/h
Near Letter Quality: 398 pages/h
Letter Quality: 248 pages/h

b) 1-play fanfold
Draft Quality: 507 pages/h
Near Letter Quality: 398 pages/h
Letter Quality: 251 pages/h

Character Sets (see also Appendix B "Character Set Tables")
- ISO-7-Bit in 11 national versions incl. ASCII, IBM-PC and -PS/2 (multilingual)
- ISO 8859/1 IBM Character Set 1/2 incl. 14 national versions.
- IBM Code Page 437, 850, 860, 863, 865.
- EPSON Extended Graphic Character Set incl. 15 national versions.

Barcodes
- Code 39, 2 of 5 industrial, 2 of 5 interleaved, Codabar (Monarch), EAN 8, EAN 13, Code 93, MSI Mod 10/10, UPC-E, UPC-A, Code 128 (incl. EAN 128), and Postnet (see also Appendix **G Barcode Quick Reference**)

Graphics
Max. resolution (V x H). 180 x 360: Single pass
360 x 360: Double pass.

Print format
136 characters at 10 cpi

Line Spacing
2, 3, 4, 6, 8, 12 n/360 lpi

---

* depending on the selected font

Platen Gap Control
The Automatic Gap Control (AGC) adjusts the distance between print head and platen according to paper thickness and programmable Platen Gap Control (PCC).

Ribbon
Black fabric ribbon for more than 16 million characters.
4-colour ribbon in connection with the colour option for ca. 3,5 million characters.

Copies
1 original + 5 copies (max. total form thickness 0.5 mm [0.02 inch]).

Interface
- Parallel Centronics®
- Serial RS-232-C/V.24

Buffer
- Up to 48 Kbyte in selectable sizes.

Diagnostics
Selftest, 'Hex dump', device status and remote diagnostics via interface.

Control Panel
16 character LCD for menu controlled setup, status- and error messages.

Dimensions
- Width = 635 mm (25.4 inch)
- Depth = 390 mm (15.6 inch); with all three ASF cassettes 415 mm (16.6)
- Height = 273 mm (10.92 inch) without stacker or ASF
  = 400 mm (16 inch) with all three ASF cassettes

Weight
Approximately 23 kg (50 lb)

Rated Voltage
100 - 120 / 200 - 240 V~ at rated f = 50 - 60 Hz

Power Consumption
160 W operating, 40 W stand by

Environmental Temperature
Operating: + 10°C to + 35°C (+ 50°F to + 95°F)
Storage: - 40°C to + 70°C (- 40°F to + 158°F)

Relative Humidity
20% - 80% (operating)
30% - 70% (operating with ASF cassettes)
5% - 85% (storage)

Noise
≤ 52 dB(A) (operating) acc. to ISO 7779

MTBF
10,000 h at 25% duty cycle

Agency Approvals
Acc. to VDE (IEC 950 and CSA 22.2/No. 220-M91), UL 478, CSA; listing mark for Canada is C-UL

EMI Approvals
Acc. to regulation of FTZ/FCC, class B

Printer Stand
Provides is the optimum work station convenience
width = 630 mm (25 inch)
depth = 540 mm (21.4 inch)
height = 730 mm (28.5 inch)

Colour Option
see chapter 6

Paper Handling
Integrated push tractor with park position for continuous paper, zero tear off, manual front insertion with face down stacker (360 sheet capacity, 80g/m²) Paper width max 15". Automatic Paper(form set)- and envelope feeder with up to three selectable cassettes for max. A4-form.

- **Manual Insertion**

Print media suitable for manual insertion:

	minimum	maximum
Paper width	105 mm (4.13")	305 mm (12")
Paper length	100 mm (3.94")	420 mm (16.54")
Paper weight		
- Cut sheets	70 - 160 g/m^2 (18-42 lb/ream)	
- Form sets (top glued, original+ 5 copies maximum)	70 - 350 g/m^2 (18-93 lb/ream)	
Total paper/form thickness		0.02"

- **Output Stacker**

Capacity	360 sheets 80g/m² 21 lb/ream Stackering face down.

- **Tractor Feed**

Continuous forms (1 original plus 5 copies) suitable for tractor feed:

	minimum	maximum
Paper width	101.6 mm (4")	406 mm (15.8")
Paper length	76.2 mm (3")	558.8 mm (22")
Paper weight		
1-ply (24 lb/ream)	60g/m² (16 lb/ream)	90g/m²
multiply (per sheet) 60 g/m² (16 lb/ream)	40 g/m² (10 lb/ream)	
total set (93 lb/ream)		350 g/m²
Total paper/form thickness		0.5 mm (0.02")

Automatic Insertion (option)

Suitable for automatic insertion of cut sheets and thin form sets (Cassette **A**) or for thick and inflexible sheets, not interrupted top-glued forms, and envelopes (Cassette **B**).

Automatic Insertion with Cassette A

	minimum	maximum
Paper width:	105 mm (4.13")	305 mm (12")
Paper length:	105 mm (4.13")	315 mm (12.4")

The minimum paper length for all cassettes depends on the mounting position of the cassette as the feeding path of the paper is the longest in the last mounted cassette.

Paper Length	minimum	maximum
Cassette 1 (first mounted)	104 mm (4.09")	315 mm (12.4")
Cassette 2	200 mm (7.87")	315 mm (12.4")
Cassette 3 (last mounted)	290 mm (11.42")	315 mm (12.4")
Paper weight		
Cut sheets	70g/m² (18 lb/ream)	100g/m² (26 lb/ream)
Form sets of action paper		260g/m² (69 lb/ream)
Total thickness of set		0.35 mm (0.014")

Note: The first and last page of the form set must have a weight between 70 and 80 g/m²; **the top- glued area must end 20 mm from the left and right margins**.

Capacity 180 sheets of 80 g/m² (21 lb/ream) paper weight.

Automatic Insertion with Cassette B (Option)

	minimum	maximum
Paper width:	105 mm (4.13")	305 mm (12")

The minimum paper length for cassette **B** depends on the mounting position of the cassette as the feeding path of the paper is the longest in the last mounted cassette.

Paper Length	minimum	maximum
Cassette 1 (first mounted)	105 mm (4.13")	315 mm (12.4")
Cassette 2	200 mm (7.87")	315 mm (12.4")
Cassette 3 (last mounted)	290 mm (11.42")	315 mm (12.4")

Paper weight		
Cut sheets	100g/m² (26 lb/ream)	150g/m² (40 lb/ream)

Appropriate direction of the fibre and flexibility for automatic feeding required.

Form sets of action paper	300g/m² (80 lb/ream)
weight of first/last page	70 / 80g/m² (18/21 lb/ream)
Total thickness of set	0.5mm (0.02")

Note: The form sets for cassette **B** must not have a horizontal perforation or carbon paper; the top glued area must not have any margins as required for cassette **A**.

Envelopes unlined, adhesive flap covered	70g/m² (18 lb/ream)	90g/m² (24 lb/ream)

- **Capacity**: 40 envelopes of 70g/m² (18 lb/ream) paper weight

PM IBM Coax SCS
Standard PM functions with parallel and serial interface; Emulation of IBM 3270 printer like 3287, 3268, 4214 or 3262 with intelligent PC-Host sharing.

PM IBM Twinax SCS
Standard PM functions with parallel and serial interface; Emulation of IBM 4214/2, 5256, 5224 or 5225 printer with intelligent PC-Host sharing for IBM systems S/4, S/36, S/38 or AS/400.

PM IBM Twinax IPDS
Standard PM functions with parallel and Twinax interface for IBM 3812 and IBM 4224 Emulation and system connection for AS/400, S/38 and S/36. Supported IPDS Towers: DC/1, PT/2, IM/1, OL/1, PS/1, DR/2, and BC/1.

PM Ethernet
Standard PM function with serial interface, allows direct attachment to Ethernet LANs simultaneous operation of IPX/SPX under NOVEL Netware and TCP/ICP under BSD-, System V-, and AIX V.3 UNIX Operating Systems is possible.

PM Token Ring
Standard PM function with serial interface, allows direct attachment to Token Ring LANs simultaneous operation of IPX/SPX under NOVEL Netware and TCP/ICP under BSD-, System V-, and AIX V.3 UNIX Operating Systems is possible.

PM IGP
Standard PM functions with parallel and serial interface plus Printronix IGP 10/20/40 Emulation.

PM S/P DAN
Standard PM functions with parallel and serial interface, DEC® ANSI LA 324 / LA 424, IBM® 4207 Proprinter XL24 (AGM), and EPSON® LQ 1060/2550 Emulation.
Fonts: Draft, Roman, San Serif, Courier, Prestige, Script, OCR A, OCR B, and Data Block.
DEC Character Sets: G0 Character Set; User Pref. Character Sets
IBM and EPSON Character sets are the same like PM SER/PAR

Appendix A to G; for Printer:

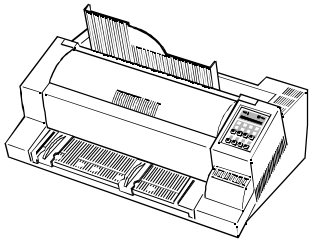

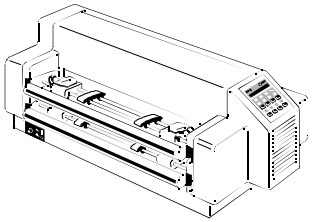

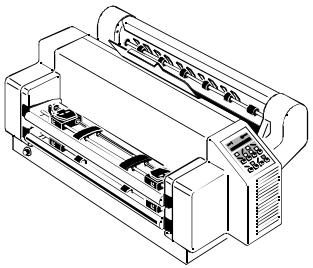

Appendix A System Interface Description

There are two system interfaces:

- one serial interface with RS-232C or RS-422 support
- one Parallel Centronics interface.

The interfaces can be operated in four different modes:

- serial interface active with RS-232C
- parallel interface active
- both interfaces active in shared mode with serial RS-232C
- both interfaces active in shared mode with serial RS-422

The following chapter gives an overview about interface characteristics, control signals, protocols, and cabling.

Any change to the operation mode (Serial, Parallel or Shared) and to the size of the interface buffer is possible only when the interface buffer is completely empty of data.

Display messages: **READY 1 ELQ, BUSY 1 ELQ, LOCAL**.

1. Serial Interface RS-232C / RS-422

- Interface Characteristics

Signal Description RS-232C		Pin No.	Direction
PG	Protective Ground	1	-
TXD	Transmit Data (from printer to host)	2	OUTPUT
RXD	Receive Data (from host to printer)	3	INPUT
RTS	Request to Send (printer is requesting data transfer from host)	4	OUTPUT
CTS	Clear to Send (host is ready to receive data from printer)	5	INPUT
DSR	Data Set Ready (host is requesting data transfer from printer, can not be used for flow control, internaly set to "1")	6	INPUT
SG	Signal Ground	7	-
DTR	Data Terminal Ready (printer is ready to receive - see also on the following pages the data communication protocols for detail meaning	20	OUTPUT

Signal Description RS-422		Pin No.	Direction
PG	Protective Ground	1	-
RDA	Receive Data (from host to printer)	3	INPUT
SDA	Send Data (from printer to host)	9	OUTPUT
SDB	Not Send Data (from printer to host)	10	OUTPUT
RDB	Not Receive Data (from host to printer)	18	INPUT

- Transmission rate: 600, 1200, 2400, 4800, 9600, or 19200 baud
- Parity: even, odd, none, or ignore
- Word length: 7, or 8 bits
- Number of stop bits: In receive mode the printer accepts 1, or 2 stop bits. The printer transmits always two bits.

Transmission Protocols:

- XON/XOFF (default)
- DTR - Ready/Busy (only RS-232C)
- XON/XOFF + DTR (only RS-232C)

2. Transmission Protocols and Connection Diagrams

2.1 DTR - Ready/Busy

(Supported RS-232C Protocols) - Full Duplex Local Connection

This protocol uses the following signal lines:

- Pin 1 Protective Ground (PG)
- 2 Transmit Data (TXD) (with internal **Pull-up**)
- 3 Receive Data (RXD) (with internal **Pull-up**)
- 5 Clear to Send (CTS)
- 7 Signal Ground (SG)
- 20 Data Terminal Ready (DTR)

Note: - The signal lines TXD (pin 2) and CTS (pin 5) are only necessary if the Device Status Report is required (see picture "Connection for Unidirectional Transfer Mode").

- **Version 1 - Connection for Unidirectional Transfer Mode**
  In the unidirectional mode, the local connection of the printer uses the **READY / BUSY** line 108.2 protocol.

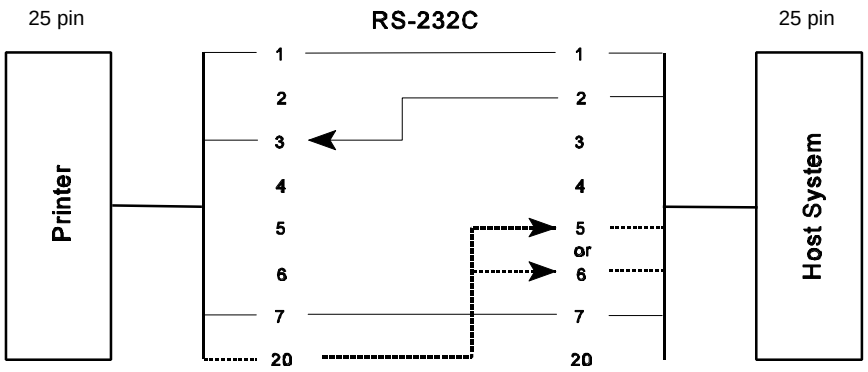

- **Version 2 - Connection full Duplex Transfer Mode**
  The READY / BUSY DTR protocol uses the DATA TERMINAL READY line to control the transmission of data from the host to prevent a buffer overflow.

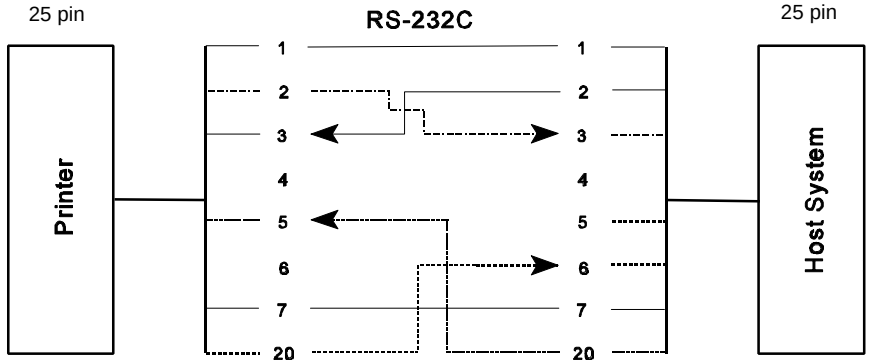

- **Version 3 - PC Connection for full Duplex Transfer Mode**

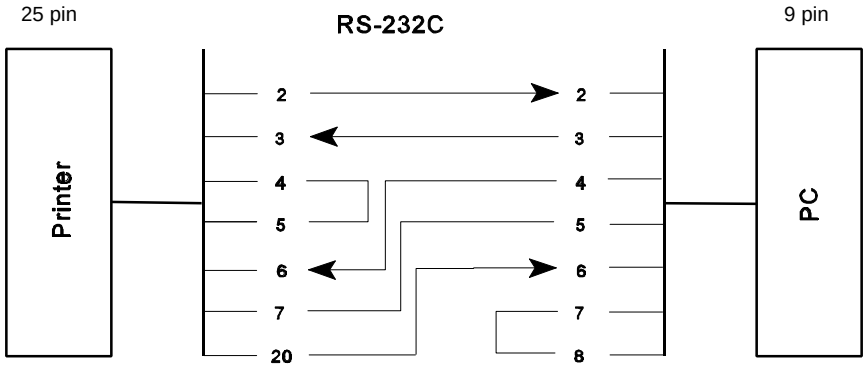

Additional Information

After Power-ON DTR is activated and the printer is ready to receive data.

DTR is deactivated when the interface buffer has only space left only for 256 more characters. Further incoming data will be stored until the interface buffer is full. All data sent in addition will get lost. DTR is activated again if there is a free interface buffer space of 512 characters.

DTR is immediately deactivated, if local mode is entered.

It is activated again, if local mode is left and a minimum of 512 bytes interface buffer is available.

2.2 XON / XOFF

This protocol requires the signal lines.

-	Pin	1	Protective Ground (PG)	-	Pin	5	Clear to Send (CTS)
-		2	Transmit Data (TXD)	-		6	Data Set Ready (DSR)
-		3	Receive Data (RXD)	-		7	Signal Ground (SG)
-		4	Request to Send (RTS)	-		20	Data Terminal Ready (DTR)

Standard Connection

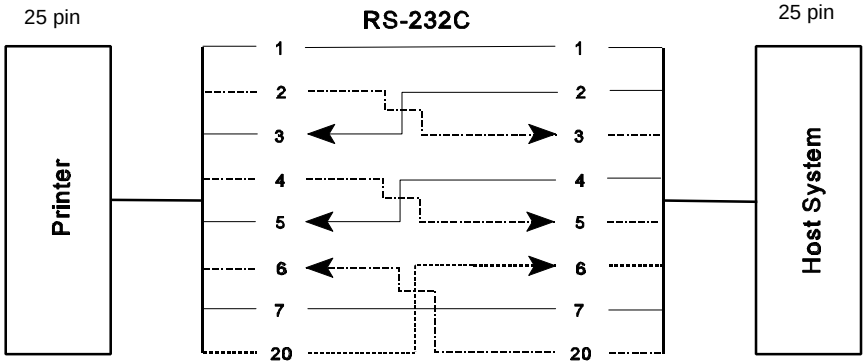

For local connections **RTS** with **CTS** can be connected and likewise **DTR** with **DSR**.

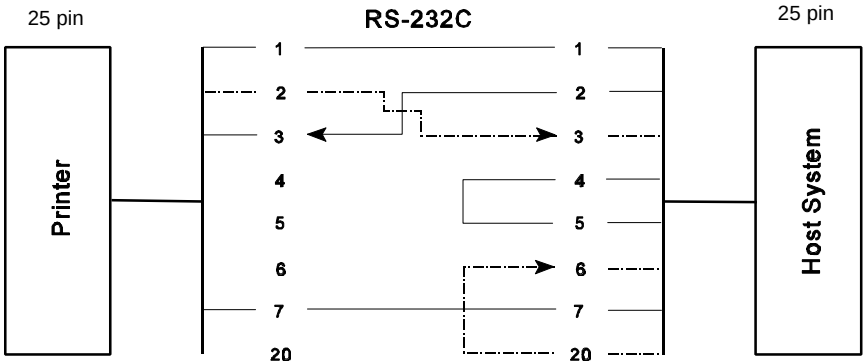

Note: Bridge between 4 and 5 means alternative **RTS** to **CTS**.

Additional Information

After Power-ON DTR and RTS are activated and the printer is ready to receive data.

XOFF is sent, when the interface buffer has only space left for 256 more characters. **XOFF** is sent again, at a level of 128 characters buffer space. Further incoming data will be stored until the interface buffer is full. All data sent in addition will get lost.

XON is sent when the interface buffer provides space for a minimum of 512 characters.

XON/XOFF can only be sent successfully when **CTS** is at active state.
When the CTS Mode is set to "CTS ignore" CTS is allways in the active state.

XOFF will be sent immediately if local mode is entered.

XON is sent again, if local mode is left and a minimum of 512 byte interface buffer is available.

2.3 Serial Interface with RS-422

This interface typ requires the signal lines.

- Pin 1 Protective Ground (PG)
- 3 Receive Data (RDA)
- 9 Send Data (SDA)
- 10 Not Send Data (SDB)
- 18 Not Receive Data (RDB)

Standard Connection

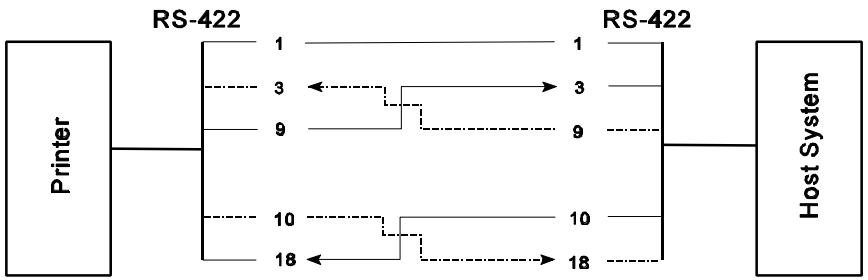

3. Parallel Centronics® Interface

Interface Characteristics - Connector pin assignment / signal definition

Signal Description		Pin No.	Return line Pin No.	Direction
$\overline{\text{STROBE}}$ *)	Control Signal from the Host. Printer reads data line (Data 1 to Data 8) when going low.	1	19	Input
Data 1 - 8	Data lines transfer the characters from the host to the printer. Data 8 = most significant bit.	2 - 9	20 - 27	Input
$\overline{\text{ACKN}}$ *)	Acknowledge - Control signal from the printer. Logical 0 indicates that the printer has received a print/-control character and is ready for the next data transfer.	10	28	Output
BUSY	Control signal from the printer. Logical 1 indicates that the printer is unable to receive any more data.**)	11	29	Output
PE	Paper Empty - Control signal from the printer. This signal goes high when paper runs out, i.e. load upper or lower tractor, paper jam.	12	--	Output
SELECT	Control signal from the printer. Always logical 1. Indicates that the printer is **ON-LINE** and ready.	13	--	Output
LG	Logic Ground	14	--	
--	not used	15	--	
LG	Logic Ground	16	--	
CG	Chassis Ground	17	--	
VCC	+ 5 volt	18	--	
SG	Signal Ground	19 - 30	--	
$\overline{\text{INIT}}$ *)	Control signal from the host. Does not reset the printer but generates an acknowledge pulse (logical 1).	31	--	Input
$\overline{\text{FAULT}}$ *)	Control signal from the printer. Always logical 1. If it goes to logical 0 the printer has been switched off.	32	--	Output
LG	Logic Ground	33	--	
--	not used	34 - 36	--	

*) Overlined signal names indicate that the signal is true when the signal level is low.

) When the interface buffer is full except for the last character, **BUSY will not be reset. **BUSY** will be reset when space is available again for least 256 characters in the interface buffer. While the printer is offline (Stop Mode) **BUSY** remains active until the printer enters the online state again.

- Maximal Transfer Speed
  The maximum throughput for data transfer is 5,000 characters per second.

3.1 Transmission Protocol Description

After Power-ON the **PE** (Paper End) signal is set to logic 0 and the **SELECT** and $\overline{\textbf{FAULT}}$ signals are set to logic 1.

The printer is now **ON-LINE** and ready to receive data.

Timing

The host sets a print/control character to the 8 data lines.

After a time delay of a minimum of 0.5 µs, the host sends a $\overline{\textbf{STROBE}}$ pulse of a minimum of 0.5 µs. The print/control character is accepted into the interface buffer and the printer transmits a **BUSY** signal to the host. When the data byte is accepted into the interface buffer the printer transmits a **BUSY** signal and an $\overline{\textbf{ACKN}}$ pulse.

The $\overline{\textbf{ACKN}}$ pulse informs the host that the data has been received and that the printer is ready to receive new data.

If the interface buffer is full except for the last character the **BUSY** is not reset in order to stop the data transfer from the host. The **BUSY** signal is only reset if space is available in the interface buffer for a minimum of 256 characters.

When pressing [START/STOP] the **BUSY** remains high and no $\overline{\textbf{ACKN}}$ is sent.

Provided a minimum of 256 characters are available in the interface buffer, pressing [START/STOP] will reset **BUSY** and transmit the $\overline{\textbf{ACKN}}$ pulse.

3.2 Timing Diagram

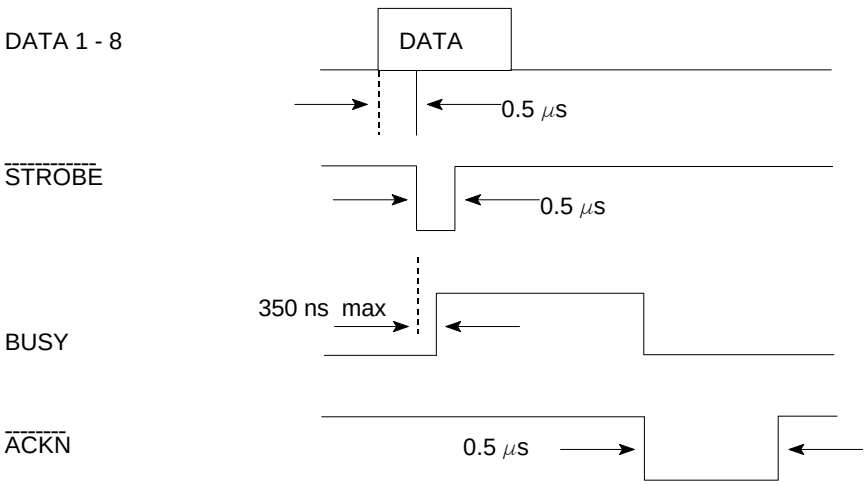

4. Shared Operation

In shared operation the interface buffer capacity is reduced by 256 bytes.

After Power-ON both the serial and the parallel interfaces are available for data transfer.

If a byte is first recognized by the serial interface the parallel interface is immediately disabled by the **BUSY** signal. The serial interface is now active and will operate, using the installed protocols.

If a byte is first recognized by the parallel interface either the **DTR** signal of the serial interface is set to **OFF** or **XOFF** is sent, depending on the protocol.

If the serial interface starts to receive data while the parallel interface is active, it is possible to receive 256 bytes of serial data. Any additional serial data will be lost.

In the **ACK/NAK** protocol a data block will be confirmed by a **NAK** signal.

When the interface buffer is completely empty of serial data, and no new data has been received by the serial interface for more than 10 seconds, both interfaces are available for data transfer again.

When the interface buffer is completely empty of parallel data and no data has been received by the parallel interface for more than 60 seconds, the 256 bytes of serial data will be processed. Afterwards, both interfaces are available for data transfer again.

Appendix B Print Samples of Resident Fonts

Equipped with the Peronality Module (PM SER/PAR), the Printer provides the following resident fonts:

Resident Fonts 10 CPI

DATA
1234567890ß,#+!"]$%&/()=?;'*
ABCDEFGHIJKLMNOPQRSTUVWXYZÄÖÜ
abcdefghijklmnopqrstuvwxyzäöü

LETTER GOTHIC
1234567890ß,#+!"]$%&/()=?;'*
ABCDEFGHIJKLMNOPQRSTUVWXYZÄÖÜ
abcdefghijklmnopqrstuvwxyzäöü

LETTER GOTHIC ITALIC
*1234567890ß,#+!"]$%&/()=?;'**
ABCDEFGHIJKLMNOPQRSTUVWXYZÄÖÜ
abcdefghijklmnopqrstuvwxyzäöü

COURIER
1234567890ß,#+!"]$%&/()=?;'*
ABCDEFGHIJKLMNOPQRSTUVWXYZÄÖÜ
abcdefghijklmnopqrstuvwxyzäöü

Resident Fonts 10 CPI

MICRO
1234567890ß,#+!"]$%&/()=?;'*
ABCDEFGHIJKLMNOPQRSTUVWXYZÄÖÜ
abcdefghijklmnopqrstuvwxyzäöü

ORATOR
1234567890ß,#+!"]$%&/()=?;'*
ABCDEFGHIJKLMNOPQRSTUVWXYZÄÖÜ
abcdefghijklmnopqrstuvwxyzäöü

ORATOR-C
1234567890ß,#+!"]$%&/()=?;'*
ABCDEFGHIJKLMNOPQRSTUVWXYZÄÖÜ
ABCDEFGHIJKLMNOPQRSTUVWXYZÄÖÜ

ROMAN
1234567890ß,#+!"]$%&/()=?;'*
ABCDEFGHIJKLMNOPQRSTUVWXYZÄÖÜ
abcdefghijklmnopqrstuvwxyzäöü

Resident Fonts, 10 CPI

PRESTIGE
1234567890ß,#+!"]$%&/()=?;'*
ABCDEFGHIJKLMNOPQRSTUVWXYZÄÖÜ
abcdefghijklmnopqrstuvwxyzäöü

SCRIPT
1234567890ß,#+!"]$%&/()=?;'*
ABCDEFGHIJKLMNOPQRSTUVWXYZÄÖÜ
abcdefghijklmnopqrstuvwxyzäöü

OCR-A
1234567890ß,#+!"]$%&/()=?;'*
ABCDEFGHIJKLMNOPQRSTUVWXYZÄÖÜ
abcdefghijklmnopqrstuvwxyzäöü

OCR-B
1234567890ß,#+!"]$%&/()=?;'*
ABCDEFGHIJKLMNOPQRSTUVWXYZÄÖÜ
abcdefghijklmnopqrstuvwxyzäöü

Appendix B Print Samples of Resident Fonts

Resident Fonts DATABLOCK

12345
67890
ABCDE
FGHIJ
abcde
fghij

Character Pitches

COURIER LQ, 20 CPI 0123456789ABCDEF

COURIER LQ, 18 CPI 0123456789ABCDEF

COURIER LQ, 17.1 CPI 0123456789ABCDEF

COURIER LQ, 15 CPI 0123456789ABCDEF

COURIER LQ, 14.4 CPI 0123456789ABCDEF

COURIER LQ, 12 CPI 0123456789ABCDEF

COURIER LQ, 10 CPI 0123456789ABCDEF

COURIER LQ, proport. 0123456789ABCDEF

Character Style Samples

COURIER outline

1234567890ß,#+!"|§%&/()=?;'*
ABCDEFGHIJKLMNOPQRSTUVWXYZÄÖÜ
abcdefghijklmnopqrstuvwxyzäöü

COURIER shadow

1234567890ß,#+!"|§%&/()=?;'*
ABCDEFGHIJKLMNOPQRSTUVWXYZÄÖÜ
abcdefghijklmnopqrstuvwxyzäöü

COURIER outline + shadow

1234567890ß,#+!"|§%&/()=?;'*
ABCDEFGHIJKLMNOPQRSTUVWXYZÄÖÜ
abcdefghijklmnopqrstuvwxyzäöü

Character Style Samples

COURIER
4xHeight 4xWidth outline

123ABCabc

COURIER
4xHeight 4xWidth shadow

123ABCabc

COURIER
4xHeight 4xWidth shadow + outline

123ABCabc

Character Size Modification

DATA, 10 CPI

0123456789ABCDEF

DATA, 1x HEIGHT 2x WIDTH

0123456789ABCDEF

DATA, 1x HEIGHT 3x WIDTH

0123456789ABCDEF

DATA, 1x HEIGHT 4x WIDTH

0123456789ABCDEF

DATA, 1x HEIGHT 4x WIDTH, BOLD

0123456789ABCDEF

Character Size Modification

DATA, 2x HEIGHT 1x WIDTH

0123456789ABCDEF

DATA, 3x HEIGHT 1x WIDTH

0123456789ABCDEF

DATA, 4x HEIGHT 1x WIDTH

0123456789ABCDEF

DATA, 4x HEIGHT 1x WIDTH, BOLD

0123456789ABCDEF

Character Size Modification

DATA, 2x HEIGHT 2x WIDTH

0123456789ABCDEF

DATA, 3x HEIGHT 3x WIDTH

01234ABCDEF

DATA, 4x HEIGHT 4x WIDTH

01234ABC

DATA, 4x HEIGHT 4x WIDTH, BOLD

01234ABC

Character Size Modification

COURIER LQ, 10 CPI

0123456789ABCDEF

COURIER LQ, 1x HEIGHT 2x WIDTH

0123456789ABCDEF

COURIER LQ, 1x HEIGHT 3x WIDTH

01234ABCDEF

COURIER LQ, 1x HEIGHT 4x WIDTH

01234ABC

COURIER LQ, 1x HEIGHT 4x WIDTH, BOLD

01234ABC

Character Size Modification

COURIER LQ, 2x HEIGHT 1x WIDTH

0123456789ABCDEF

COURIER LQ, 3x HEIGHT 1x WIDTH

0123456789ABCDEF

COURIER LQ, 4x HEIGHT 1x WIDTH

0123456789ABCDEF

COURIER LQ, 4x HEIGHT 1x WIDTH, BOLD

0123456789ABCDEF

Character Size Modification

COURIER LQ, 2x HEIGHT 2x WIDTH

0123456789ABCDEF

COURIER LQ, 3x HEIGHT 3x WIDTH

01234ABCDEF

COURIER LQ, 4x HEIGHT 4x WIDTH

01234ABC

COURIER LQ, 4x HEIGHT 4x WIDTH, BOLD

01234ABC

DATABLOCK with Character Size Modification

DATABLOCK 1x HEIGHT 1x WIDTH

123ABC

DATABLOCK 2x HEIGHT 2x WIDTH

12A

DATABLOCK with Character Size Modification

DATABLOCK 3x HEIGHT 3x WIDTH

1A

DATABLOCK 3x HEIGHT 3x WIDTH BOLD

1A

DATA LARGE

DATA LARGE

§ ! "#$%& '( )

/0123456789

?§ABCDEFGHI

OPQRSTUVWXY

_ 'abcdefghi

opqrstuvwxy

Çüéâäàåçêë

ÅÉæÆôöòûùÿÖ

fáíóúñÑªº¿⌐

Appendix C Character Set Tables

1 Code Table IBM All Character Set

	0	1	2	3	4	5	6	7	8	9	A	B	C	D	E	F
0	∅	▸	SP	0	@	P	`	p	Ç	É	á	!	.	J	α	≡
1	☺	◂	!	1	A	Q	a	q	ü	æ	í	"	2	L	β	±
2	☻	↕	″	2	B	R	b	r	é	Æ	ó	#	0	H	Γ	≥
3	♥	‼	#	3	C	S	c	s	â	ô	ú	*	/	F	π	≤
4	♦	¶	$	4	D	T	d	t	ä	ö	ñ	1	)	B	Σ	⌠
5	♣	§	%	5	E	U	e	u	à	ò	Ñ	I	3	?	σ	⌡
6	♠	_	&	6	F	V	f	v	å	û	ª	M	G	C	µ	÷
7	●	↨	’	7	G	W	g	w	ç	ù	º	D	K	O	τ	≈
8	◘	↑	(	8	H	X	h	x	ê	ÿ	¿	@	9	P	Φ	°
9	○	↓	)	9	I	Y	i	y	ë	Ö	⌐	<	6	-	Θ	·
A	◙	→	*	:	J	Z	j	z	è	Ü	¬	5	=	+	Ω	·
B	♂	←	+	;	K	[	k	{	ï	¢	½	7	;	$	δ	√
C	♀	∟	´	<	L	\	l	|	î	£	¼	8	:	(	∞	ⁿ
D	♪	↔	-	=	M	]	m	}	ì	¥	¡	E	4	%	ø	²
E	♫	▲	.	>	N	^	n	~	Ä	₧	«	A	>	'	є	■
F	☼	▼	/	?	O	_	o		Å	ƒ	»	,	N	&	∩	SP

Applicable for Code Table IBM Set 1 and 2

2 Code Table IBM Set 1

National Version = USA

	0	1	2	3	4	5	6	7	8	9	A	B	C	D	E	F
0	NUL		SP	0	@	P	`	p	NUL		á	!	.	J	α	≡
1		DC1	!	1	A	Q	a	q		DC1	í	"	2	L	β	±
2		DC2	″	2	B	R	b	r		DC2	ó	#	0	H	Γ	≥
3		DC3	#	3	C	S	c	s		DC3	ú	*	/	F	π	≤
4		DC4	$	4	D	T	d	t		DC4	ñ	1	)	B	Σ	⌠
5			%	5	E	U	e	u			Ñ	I	3	?	σ	⌡
6			&	6	F	V	f	v			ª	M	G	C	µ	÷
7	BEL		’	7	G	W	g	w	BEL		º	D	K	O	τ	≈
8	BS	CAN	(	8	H	X	h	x	BS	CAN	¿	@	9	P	Φ	°
9	HT		)	9	I	Y	i	y	HT		⌐	<	6	-	Θ	·
A	LF		*	:	J	Z	j	z	LF		¬	5	=	+	Ω	·
B	VT	ESC	+	;	K	[	k	{	VT	ESC	½	7	;	$	δ	√
C	FF		´	<	L	\	l	|	FF		¼	8	:	(	∞	ⁿ
D	CR		-	=	M	]	m	}	CR		¡	E	4	%	ø	²
E	SO		.	>	N	^	n	~	SO		«	A	>	'	є	■
F	SI		/	?	O	_	o		SI		»	,	N	&	∩	SP

2.1 National Version IBM Set 1

	Character Code (Hex)											
	23	24	40	5B	5C	5D	5E	60	7B	7C	7D	7E
1: USA	#	$	@	[	\	]	^	`	{	|	}	~
2: FRANCE	#	$	à	°	ç	§	^	`	é	ù	è	¨
3: GERMANY	#	$	§	Ä	Ö	Ü	^	`	ä	ö	ü	ß
4: U.K.	£	$	@	[	\	]	^	`	{	|	}	~
5: DENMARK	#	$	@	Æ	Ø	Å	^	`	æ	ø	å	~
6: SWEDEN	#	¤	É	Ä	Ö	Å	Ü	é	ä	ö	å	ü
7: ITALY	#	$	@	°	\	é	^	ù	à	ò	è	ì
8: SPAIN	₧	$	@	¡	Ñ	¿	^	`	¨	ñ	}	~
9: JAPAN	#	$	@	[	¥	]	^	`	{	|	}	~
10: NORWAY	#	¤	É	Æ	Ø	Å	Ü	é	æ	ø	å	ü
11: DENMARK 2	#	$	É	Æ	Ø	Å	Ü	é	æ	ø	å	ü
12: SPAIN 2	#	$	á	¡	Ñ	¿	é	`	í	ñ	ó	ú
13: LATIN AM.	#	$	á	¡	Ñ	¿	é	Ü	í	ñ	ó	ú
14: TURKEY	#	ī	Ī	Ç	Ö	Ş	Ü	ğ	ç	ö	ş	ü

3 Code Table IBM Set 2

	0	1	2	3	4	5	6	7	8	9	A	B	C	D	E	F
0	NUL		SP	0	@	P	`	p	Ç	É	á	!	.	J	α	≡
1		DC1	!	1	A	Q	a	q	ü	æ	í	"	2	L	β	±
2		DC2	″	2	B	R	b	r	é	Æ	ó	#	0	H	Γ	≥
3	♥	DC3	#	3	C	S	c	s	â	ô	ú	*	/	F	π	≤
4	♦	DC4	$	4	D	T	d	t	ä	ö	ñ	1	)	B	Σ	⌠
5	♣	§	%	5	E	U	e	u	à	ò	Ñ	I	3	?	σ	⌡
6	♠		&	6	F	V	f	v	å	û	ª	M	G	C	µ	÷
7	BEL		’	7	G	W	g	w	ç	ù	º	D	K	O	τ	≈
8	BS	CAN	(	8	H	X	h	x	ê	ÿ	¿	@	9	P	Φ	°
9	HT		)	9	I	Y	i	y	ë	Ö	⌐	<	6	-	Θ	·
A	LF		*	:	J	Z	j	z	è	Ü	¬	5	=	+	Ω	·
B	VT	ESC	+	;	K	[	k	{	ï	¢	½	7	;	$	δ	√
C	FF		´	<	L	\	l	|	î	£	¼	8	:	(	∞	ⁿ
D	CR		-	=	M	]	m	}	ì	¥	¡	E	4	%	ø	²
E	SO		.	>	N	^	n	~	Ä	₧	«	A	>	'	ϵ	■
F	SI		/	?	O	_	o		Å	ƒ	»	,	N	&	∩	SP

3.1 National Version IBM Set 2

	Character Code (Hex)													
	23	24	40	5B	5C	5D	5E	60	7B	7C	7D	7E	9B	9D
1: USA	#	$	@	[	\	]	^	`	{	|	}	~	¢	¥
2: FRANCE	#	$	à	°	ç	§	^	`	é	ù	è	¨	¢	¥
3: GERMANY	#	$	§	Ä	Ö	Ü	^	`	ä	ö	ü	ß	¢	¥
4: U.K.	£	$	@	[	\	]	^	`	{	|	}	~	¢	¥
5: DENMARK	#	$	@	[	\	]	^	`	{	|	}	~	ø	Ø
6: SWEDEN	#	¤	É	Ä	Ö	Å	Ü	é	ä	ö	å	ü	¢	¥
7: ITALY	#	$	@	°	\	é	^	ù	à	ò	è	ì	¢	¥
8: SPAIN	Pt	$	@	¡	Ñ	¿	^	`	¨	ñ	}	~	¢	¥
9: JAPAN	#	$	@	[	¥	]	^	`	{	|	}	~	¢	¥
10: NORWAY	#	$	@	[	\	]	^	`	{	|	}	~	ø	Ø
11: DEMARK 2	#	$	@	[	\	]	^	`	{	|	}	~	ø	Ø
12: SPAIN 2	#	$	á	¡	Ñ	¿	é	`	í	ñ	ó	ú	¢	¥
13: LATIN AM.	#	$	á	¡	Ñ	¿	é	Ü	í	ñ	ó	ú	¢	¥
14: TURKEY	#	ī	Ī	Ç	Ö	Ş	Ü	ğ	ç	ö	ş	ü	¢	¥

4 Code Table IBM Code Page

Code Page	Countries
1: Code Page 437	USA
2: Code Page 850	Germany, U.K., Denmark, Sweden, Italy, Spain, Japan, Latin Am., Turkey
3: Code Page 860	Portugal
4: Code Page 863	France
5: Code Page 865	Norway
6: Code Page 858	Germany, U.K., Denmark, Sweden, Italy, Spain, Japan, Latin Am, Turkey; inc. EURO Symbol

4.1 IBM Code Page 437

	0	1	2	3	4	5	6	7	8	9	A	B	C	D	E	F
0	∅	▸	SP	0	@	P	`	p	Ç	É	á	!	.	J	α	≡
1	☺	◂	!	1	A	Q	a	q	ü	æ	í	"	2	L	β	±
2	☻	↕	″	2	B	R	b	r	é	Æ	ó	#	0	H	Γ	≥
3	♥	‼	#	3	C	S	c	s	â	ô	ú	*	/	F	π	≤
4	♦	¶	$	4	D	T	d	t	ä	ö	ñ	1	)	B	Σ	⌠
5	♣	§	%	5	E	U	e	u	à	ò	Ñ	I	3	?	σ	⌡
6	♠	_	&	6	F	V	f	v	å	û	ª	M	G	C	µ	÷
7	●	↨	’	7	G	W	g	w	ç	ù	º	D	K	O	τ	≈
8	◘	↑	(	8	H	X	h	x	ê	ÿ	¿	@	9	P	Φ	°
9	○	↓	)	9	I	Y	i	y	ë	Ö	⌐	<	6	-	Θ	·
A	◙	→	*	:	J	Z	j	z	è	Ü	¬	5	=	+	Ω	·
B	♂	←	+	;	K	[	k	{	ï	¢	½	7	;	$	δ	√
C	♀	∟	´	<	L	\	l	|	î	£	¼	8	:	(	∞	ⁿ
D	♪	↔	-	=	M	]	m	}	ì	¥	¡	E	4	%	ø	²
E	♫	▲	.	>	N	^	n	~	Ä	₧	«	A	>	'	ϵ	■
F	☼	▼	/	?	O	_	o		Å	ƒ	»	,	N	&	∩	SP

Appendix C Character Set Tables

4.2 IBM Code Page 850

	0	1	2	3	4	5	6	7	8	9	A	B	C	D	E	F
0	∅	▸	SP	0	@	P	`	p	Ç	É	á	!	.	ð	Ó	-
1	☺	◂	!	1	A	Q	a	q	ü	æ	í	"	2	Ð	β	±
2	☻	↕	″	2	B	R	b	r	é	Æ	ó	#	0	Ê	Ô	=
3	♥	‼	#	3	C	S	c	s	â	ô	ú	*	/	Ë	Ò	¾
4	♦	¶	$	4	D	T	d	t	ä	ö	ñ	1	)	È	õ	¶
5	♣	§	%	5	E	U	e	u	à	ò	Ñ	Á	3	í	Õ	§
6	♠	_	&	6	F	V	f	v	å	û	ª	Â	ã	Í	µ	÷
7	●	↨	’	7	G	W	g	w	ç	ù	º	À	Ã	Î	þ	¸
8	◘	↑	(	8	H	X	h	x	ê	ÿ	¿	©	9	Ï	Þ	¯
9	○	↓	)	9	I	Y	i	y	ë	Ö	®	<	6	-	Ú	¨
A	◙	→	*	:	J	Z	j	z	è	Ü	¬	5	=	+	Û	°
B	♂	←	+	;	K	[	k	{	ï	ø	½	7	;	$	Ù	¹
C	♀	∟	´	<	L	\	l	|	î	£	¼	8	:	(	ý	³
D	♪	↔	-	=	M	]	m	}	ì	Ø	¡	¢	4	|	Ý	²
E	♫	▲	.	>	N	^	n	~	Ä	×	«	¥	>	ì	‾	■
F	☼	▼	/	?	O	_	o		Å	ƒ	»	,	¤	&	'	SP

6.3 IBM Code Page 858

	0	1	2	3	4	5	6	7	8	9	A	B	C	D	E	F
0	∅	▸	SP	0	@	P	`	p	Ç	É	á	!	.	ð	Ó	-
1	☺	◂	!	1	A	Q	a	q	ü	æ	í	"	2	Ð	β	±
2	☻	↕	″	2	B	R	b	r	é	Æ	ó	#	0	Ê	Ô	=
3	♥	‼	#	3	C	S	c	s	â	ô	ú	*	/	Ë	Ò	¾
4	♦	¶	$	4	D	T	d	t	ä	ö	ñ	1	)	È	õ	¶
5	♣	§	%	5	E	U	e	u	à	ò	Ñ	Á	3	€	Õ	§
6	♠	_	&	6	F	V	f	v	å	û	ª	Â	ã	Ī	µ	÷
7	●	↨	’	7	G	W	g	w	ç	ù	º	À	Ã	Î	þ	¸
8	◘	↑	(	8	H	X	h	x	ê	ÿ	¿	©	9	Ï	Þ	˘
9	○	↓	)	9	I	Y	i	y	ë	Ö	®	<	6	-	Ú	¨
A	◙	→	*	:	J	Z	j	z	è	Ü	¬	5	=	+	Û	°
B	♂	←	+	;	K	[	k	{	ï	ø	½	7	;	$	Ù	¹
C	♀	∟	´	<	L	\	l	|	î	£	¼	8	:	(	ý	³
D	♪	↔	-	=	M	]	m	}	ì	Ø	¡	¢	4	|	Ý	²
E	♫	▲	.	>	N	^	n	~	Ä	×	«	¥	>	ì	¯	■
F	☼	▼	/	?	O	_	o		Å	ƒ	»	,	¤	&	'	SP

4.3 IBM Code Page 860

	0	1	2	3	4	5	6	7	8	9	A	B	C	D	E	F
0	∅	▸	SP	0	@	P	`	p	Ç	É	á	!	.	J	α	≡
1	☺	◂	!	1	A	Q	a	q	ü	À	í	"	2	L	β	±
2	☻	↕	″	2	B	R	b	r	é	È	ó	#	0	H	Γ	≥
3	♥	‼	#	3	C	S	c	s	â	ô	ú	*	/	F	π	≤
4	♦	¶	$	4	D	T	d	t	ã	õ	ñ	1	)	B	Σ	⌠
5	♣	§	%	5	E	U	e	u	à	ò	Ñ	I	3	?	σ	⌡
6	♠	_	&	6	F	V	f	v	Á	Ú	ª	M	G	C	µ	÷
7	●	↨	’	7	G	W	g	w	ç	ù	º	D	K	O	τ	≈
8	◘	↑	(	8	H	X	h	x	ê	Ì	¿	@	9	P	Φ	°
9	○	↓	)	9	I	Y	i	y	Ê	Õ	Ò	<	6	-	Θ	·
A	◙	→	*	:	J	Z	j	z	è	Ü	¬	5	=	+	Ω	·
B	♂	←	+	;	K	[	k	{	í	¢	½	7	;	$	δ	√
C	♀	∟	´	<	L	\	l	|	ô	£	¼	8	:	(	∞	ⁿ
D	♪	↔	-	=	M	]	m	}	ì	Ù	¡	E	4	%	ø	²
E	♫	▲	.	>	N	^	n	~	Ã	₧	«	A	>	'	є	■
F	☼	▼	/	?	O	_	o		Â	Ó	»	,	N	&	∩	SP

4.4 IBM Code Page 863

	0	1	2	3	4	5	6	7	8	9	A	B	C	D	E	F
0	∅	▸	SP	0	@	P	`	p	Ç	É	|	!	.	J	α	≡
1	☺	◂	!	1	A	Q	a	q	ü	È	'	"	2	L	β	±
2	☻	↕	″	2	B	R	b	r	é	Ê	ó	#	0	H	Γ	≥
3	♥	‼	#	3	C	S	c	s	â	ô	ú	*	/	F	π	≤
4	♦	¶	$	4	D	T	d	t	Â	Ë	¨	1	)	B	Σ	⌠
5	♣	§	%	5	E	U	e	u	à	Ï	¸	I	3	?	σ	⌡
6	♠	_	&	6	F	V	f	v	¶	û	³	M	G	C	µ	÷
7	●	↨	’	7	G	W	g	w	ç	ù	¯	D	K	O	τ	≈
8	◘	↑	(	8	H	X	h	x	ê	¤	Î	@	9	P	Φ	°
9	○	↓	)	9	I	Y	i	y	ë	Ô	⌐	<	6	-	Θ	·
A	◙	→	*	:	J	Z	j	z	è	Ü	¬	5	=	+	Ω	·
B	♂	←	+	;	K	[	k	{	ï	¢	½	7	;	$	δ	√
C	♀	∟	´	<	L	\	l	|	î	£	¼	8	:	(	∞	ⁿ
D	♪	↔	-	=	M	]	m	}	=	Ù	¾	E	4	%	ø	²
E	♫	▲	.	>	N	^	n	~	À	Û	«	A	>	'	є	■
F	☼	▼	/	?	O	_	o		§	ƒ	»	,	N	&	∩	SP

4.5 IBM Code Page 865

	0	1	2	3	4	5	6	7	8	9	A	B	C	D	E	F
0	∅	▸	SP	0	@	P	`	p	Ç	É	á	!	.	J	α	≡
1	☺	◂	!	1	A	Q	a	q	ü	æ	í	"	2	L	β	±
2	☻	↕	″	2	B	R	b	r	é	Æ	ó	#	0	H	Γ	≥
3	♥	‼	#	3	C	S	c	s	â	ô	ú	*	/	F	π	≤
4	♦	¶	$	4	D	T	d	t	ä	ö	ñ	1	)	B	Σ	⌠
5	♣	§	%	5	E	U	e	u	à	ò	Ñ	I	3	?	σ	⌡
6	♠	_	&	6	F	V	f	v	å	û	ª	M	G	C	µ	÷
7	●	↨	’	7	G	W	g	w	ç	ù	º	D	K	O	τ	≈
8	◘	↑	(	8	H	X	h	x	ê	ÿ	¿	@	9	P	Φ	°
9	○	↓	)	9	I	Y	i	y	ë	Ö	⌐	<	6	-	Θ	·
A	◙	→	*	:	J	Z	j	z	è	Ü	¬	5	=	+	Ω	·
B	♂	←	+	;	K	[	k	{	ï	ø	½	7	;	$	δ	√
C	♀	∟	´	<	L	\	l	|	î	£	¼	8	:	(	∞	ⁿ
D	♪	↔	-	=	M	]	m	}	ì	Ø	¡	E	4	%	ø	²
E	♫	▲	.	>	N	^	n	~	Ä	₧	«	A	>	'	є	■
F	☼	▼	/	?	O	_	o		Å	ƒ	¤	,	N	&	∩	SP

5 EPSON Extended Graphics Character Table

	0	1	2	3	4	5	6	7	8	9	A	B	C	D	E	F
0			SP	0	@	P	`	p	Ç	É	á	!	.	J	α	≡
1			!	1	A	Q	a	q	ü	æ	í	"	2	L	β	±
2			″	2	B	R	b	r	é	Æ	ó	#	0	H	Γ	≥
3			#	3	C	S	c	s	â	ô	ú	*	/	F	π	≤
4			$	4	D	T	d	t	ä	ö	ñ	1	)	B	Σ	⌠
5		§	%	5	E	U	e	u	à	ò	Ñ	I	3	?	σ	⌡
6			&	6	F	V	f	v	å	û	ª	M	G	C	µ	÷
7			’	7	G	W	g	w	ç	ù	º	D	K	O	τ	≈
8			(	8	H	X	h	x	ê	ÿ	¿	@	9	P	Φ	°
9			)	9	I	Y	i	y	ë	Ö	⌐	<	6	-	Θ	·
A			*	:	J	Z	j	z	è	Ü	¬	5	=	+	Ω	·
B			+	;	K	[	k	{	ï	¢	½	7	;	$	δ	√
C			´	<	L	\	l	|	î	£	¼	8	:	(	∞	ⁿ
D			-	=	M	]	m	}	ì	¥	¡	E	4	%	ø	²
E			.	>	N	^	n	~	Ä	₧	«	A	>	'	є	■
F			/	?	O	_	o		Å	ƒ	»	,	N	&	∩	SP

5.1 National Version EPSON Extended graphics Character Table

	Character Code (Hex)											
	23	24	40	5B	5C	5D	5E	60	7B	7C	7D	7E
1: USA	#	$	@	[	\	]	^	`	{	|	}	~
2: FRANCE	#	$	à	°	ç	§	^	`	é	ù	è	¨
3: GERMANY	#	$	§	Ä	Ö	Ü	^	`	ä	ö	ü	ß
4: U.K.	£	$	@	[	\	]	^	`	{	|	}	~
5: DENMARK	#	$	@	Æ	Ø	Å	^	`	æ	ø	å	~
6: SWEDEN	#	¤	É	Ä	Ö	Å	Ü	é	ä	ö	å	ü
7: ITALY	#	$	@	°	\	é	^	ù	à	ò	è	ì
8: SPAIN	₧	$	@	¡	Ñ	¿	^	`	¨	ñ	}	~
9: JAPAN	#	$	@	[	¥	]	^	`	{	|	}	~
10: NORWAY	#	¤	É	Æ	Ø	Å	Ü	é	æ	ø	å	ü
11: DENMARK 2	#	$	É	Æ	Ø	Å	Ü	é	æ	ø	å	ü
12: SPAIN 2	#	$	á	¡	Ñ	¿	é	`	í	ñ	ó	ú
13: LATIN AM.	#	$	á	¡	Ñ	¿	é	Ü	í	ñ	ó	ú
14: TURKEY	#	ī	Ī	Ç	Ö	Ş	Ü	ğ	ç	ö	ş	ü
15: LEGAL	#	$	§	°	'	"	¶	`	©	®	†	™

5.2 EPSON Italic Character Table

	0	1	2	3	4	5	6	7	8	9	A	B	C	D	E	F
0			SP	0	@	P	`	p			*SP*	*0*	*@*	*P*	*`*	*p*
1			!	1	A	Q	a	q			*!*	*1*	*A*	*Q*	*a*	*q*
2			″	2	B	R	b	r			*″*	*2*	*B*	*R*	*b*	*r*
3			#	3	C	S	c	s			*#*	*3*	*C*	*S*	*c*	*s*
4			$	4	D	T	d	t			*$*	*4*	*D*	*T*	*d*	*t*
5			%	5	E	U	e	u			*%*	*5*	*E*	*U*	*e*	*u*
6			&	6	F	V	f	v			*&*	*6*	*F*	*V*	*f*	*v*
7			’	7	G	W	g	w			*’*	*7*	*G*	*W*	*g*	*w*
8			(	8	H	X	h	x			*(*	*8*	*H*	*X*	*h*	*x*
9			)	9	I	Y	i	y			*)*	*9*	*I*	*Y*	*i*	*y*
A			*	:	J	Z	j	z			***	*:*	*J*	*Z*	*j*	*z*
B			+	;	K	[	k	{			*+*	*;*	*K*	*[*	*k*	*{*
C			´	<	L	\	l	|			*´*	*<*	*L*	**	*l*	*|*
D			-	=	M	]	m	}			*-*	*=*	*M*	*]*	*m*	*}*
E			.	>	N	^	n	~			*.*	*>*	*N*	*^*	*n*	*~*
F			/	?	O	_	o				*/*	*?*	*O*	*_*	*o*	

This character table is selected by the command **ESC t**.

5.3 National Version EPSON Italic Character Table (part 1)

	Character Code (Hex)											
	23	24	40	5B	5C	5D	5E	60	7B	7C	7D	7E
1: USA	#	$	@	[	\	]	^	`	{	|	}	~
2: FRANCE	#	$	à	°	ç	§	^	`	é	ù	è	¨
3: GERMANY	#	$	§	Ä	Ö	Ü	^	`	ä	ö	ü	ß
4: U.K.	£	$	@	[	\	]	^	`	{	|	}	~
5: DENMARK	#	$	@	Æ	Ø	Å	^	`	æ	ø	å	~
6: SWEDEN	#	¤	É	Ä	Ö	Å	Ü	é	ä	ö	å	ü
7: ITALY	#	$	@	°	\	é	^	ù	à	ò	è	ì
8: SPAIN	Pt	$	@	¡	Ñ	¿	^	`	¨	ñ	}	~
9: JAPAN	#	$	@	[	¥	]	^	`	{	|	}	~
10: NORWAY	#	¤	É	Æ	Ø	Å	Ü	é	æ	ø	å	ü
11: DENMARK 2	#	$	É	Æ	Ø	Å	Ü	é	æ	ø	å	ü
12: SPAIN 2	#	$	á	¡	Ñ	¿	é	`	í	ñ	ó	ú
13: LATIN AM.	#	$	á	¡	Ñ	¿	é	Ü	í	ñ	ó	ú
14: TURKEY	#	ī	Ī	Ç	Ö	Ş	Ü	ğ	ç	ö	ş	ü
15: LEGAL	#	$	§	°	'	"	¶	`	©	®	†	™

5.3 National Version EPSON Italic Character Table (part 2)

	Character Code (Hex)											
	A3	A4	C0	DB	DC	DD	DE	E0	FB	FC	FD	FE
1: USA	#	$	@	[	\	]	^	`	{	|	}	~
2: FRANCE	#	$	à	°	ç	§	^	`	é	ù	è	¨
3: GERMANY	#	$	§	Ä	Ö	Ü	^	`	ä	ö	ü	ß
4: U.K.	£	$	@	[	\	]	^	`	{	|	}	~
5: DENMARK	#	$	@	Æ	Ø	Å	^	`	æ	ø	å	~
6: SWEDEN	#	¤	É	Ä	Ö	Å	Ü	é	ä	ö	å	ü
7: ITALY	#	$	@	°	\	é	^	ù	à	ò	è	ì
8: SPAIN	Pt	$	@	¡	Ñ	¿	^	`	¨	ñ	}	~
9: JAPAN	#	$	@	[	¥	]	^	`	{	|	}	~
10: NORWAY	#	¤	É	Æ	Ø	Å	Ü	é	æ	ø	å	ü
11: DENMARK 2	#	$	É	Æ	Ø	Å	Ü	é	æ	ø	å	ü
12: SPAIN 2	#	$	á	¡	Ñ	¿	é	`	í	ñ	ó	ú
13: LATIN AM.	#	$	á	¡	Ñ	¿	é	Ü	í	ñ	ó	ú
14: TURKEY	#	ī	Ī	Ç	Ö	Ş	Ü	ğ	ç	ö	ş	ü
15: LEGAL	#	$	§	°	′	″	¶	`	©	®	†	™

6 Code Table OCR-A

	0	1	2	3	4	5	6	7
0	NUL	DLE	SP	0	@	P	+	p
1	SOH	DC1	!	1	A	Q	a	q
2	STX	DC2	″	2	B	R	b	r
3	ETX	DC3	#	3	C	S	c	s
4	EOT	DC4	$	4	D	T	d	t
5	ENQ	NAK	%	5	E	U	e	u
6	ACK	SYN	&	6	F	V	f	v
7	BEL	ETB	’	7	G	W	g	w
8	BS	CAN	(	8	H	X	h	x
9	HT	EM	)	9	I	Y	i	y
A	LF	SUB	*	:	J	Z	j	z
B	VT	ESC	+	;	K	[	k	{
C	FF	FS	¬	<	L	\	l	|
D	CR	GR	-	=	M	]	m	}
E	SO	RS	.	>	N	^	n	*
F	SI	US	/	?	O	RR	o	$

7. Code Pages for the Eastern European Countries

7.1 CODEPAGE 437 Greek

	2	3	4	5	6	7	8	9	A	B	C	D	E	F
0	SP	0	@	P	`	p	Α	Ρ	ι	!	.	J	ω	Ώ
1	!	1	A	Q	a	q	Β	Σ	κ	"	2	L	ά	±
2	″	2	B	R	b	r	Γ	Τ	λ	#	0	H	έ	≥
3	#	3	C	S	c	s	Δ	Υ	μ	*	/	F	ή	≤
4	$	4	D	T	d	t	Ε	Φ	ν	1	)	B	ϊ	⌠
5	%	5	E	U	e	u	Ζ	Χ	ξ	I	3	?	ί	⌡
6	&	6	F	V	f	v	Η	Ψ	ο	M	G	C	ό	÷
7	’	7	G	W	g	w	Θ	Ω	π	D	K	O	ύ	≈
8	(	8	H	X	h	x	Ι	α	ρ	@	9	P	ϋ	°
9	)	9	I	Y	i	y	Κ	β	σ	<	6	-	ώ	£
A	*	:	J	Z	j	z	Λ	γ	ς	5	=	+	Ά	¥
B	+	;	K	[	k	{	Μ	δ	τ	7	;	$	Έ	√
C	´	<	L	\	l	|	Ν	ε	υ	8	:	(	Ή	ⁿ
D	-	=	M	]	m	}	Ξ	ζ	φ	E	4	%	Ί	²
E	.	>	N	^	n	~	Ο	η	χ	A	>	'	Ό	■
F	/	?	O	_	o		Π	θ	ψ	,	N	&	Ύ	

SP = Space

7.2 CODEPAGE 851 Greek

	2	3	4	5	6	7	8	9	A	B	C	D	E	F
0	SP	0	@	P	`	p	Ç	Ί	ϊ	!	.	Τ	ζ	-
1	!	1	A	Q	a	q	ü		Ί	"	2	Υ	η	±
2	″	2	B	R	b	r	é	Ό	ό	#	0	Φ	θ	υ
3	#	3	C	S	c	s	â	ô	ύ	*	/	Χ	ι	φ
4	$	4	D	T	d	t	ä	ö	Ά	1	)	Ψ	κ	χ
5	%	5	E	U	e	u	à	Υ	Β	Κ	3	Ω	λ	§
6	&	6	F	V	f	v	Á	û	Γ	Λ	Π	α	μ	ψ
7	’	7	G	W	g	w	ç	ù	Δ	Μ	Ρ	β	ν	¸
8	(	8	H	X	h	x	ê	Ώ	Ε	Ν	9	γ	ξ	°
9	)	9	I	Y	i	y	ë	Ö	Ζ	<	6	-	ο	¨
A	*	:	J	Z	j	z	è	Ü	Η	5	=	+	π	ω
B	+	;	K	[	k	{	ϊ	ά	½	7	;	$	ρ	ΰ
C	´	<	L	\	l	|	î	£	Θ	8	:	(	σ	ϋ
D	-	=	M	]	m	}	Έ	έ	Ι	Ξ	4	ζ	ς	ώ
E	.	>	N	^	n	~	Ä	ή	«	Ο	>	ε	τ	■
F	/	?	O	_	o		Ή	ί	»	,	Σ	&	’	

SP = Space

7.3 CODEPAGE 928 Greek

	2	3	4	5	6	7	8	9	A	B	C	D	E	F
0	SP	0	@	P	`	p	Ç	É		°	ΐ	Π	ΰ	π
1	!	1	A	Q	a	q	ü	æ	‘	±	Α	Ρ	α	ρ
2	″	2	B	R	b	r	é	Æ	’	²	Β		β	ς
3	#	3	C	S	c	s	â	ô	£	³	Γ	Σ	γ	σ
4	$	4	D	T	d	t	ä	ö		΄	Δ	Τ	δ	τ
5	%	5	E	U	e	u	à	ò		¨	Ε	Υ	ε	υ
6	&	6	F	V	f	v	å	û	₯	’Α	Ζ	Φ	ζ	φ
7	’	7	G	W	g	w	ç	ù	§	●	Η	Χ	η	χ
8	(	8	H	X	h	x	ê	ÿ	¨	’Ε	Θ	Ψ	θ	ψ
9	)	9	I	Y	i	y	ë	Ö	©	’Η	Ι	Ω	ι	ω
A	*	:	J	Z	j	z	è	Ü	‘Ι	’Ι	Κ	Ϊ	κ	ϊ
B	+	;	K	[	k	{	ï	¢	«	»	Λ	Ÿ	λ	ü
C	´	<	L	\	l	|	î	£	¬	’Ο	Μ	ά	μ	ό
D	-	=	M	]	m	}	ì	¥		½	Ν	έ	ν	ύ
E	.	>	N	^	n	~	Ä	₧		’Υ	Ξ	ή	ξ	ώ
F	/	?	O	_	o		Å	ƒ	‒	’Ω	Ο	ί	ο	

SP = Space

7.4 CODEPAGE 855 Cyri

	2	3	4	5	6	7	8	9	A	B	C	D	E	F
0	SP	0	@	P	`	p	ђ	љ	а	!	.	л	Я	–
1	!	1	A	Q	a	q	Ђ	Љ	А	"	2	Л	р	ы
2	″	2	B	R	b	r	ѓ	њ	б	#	0	м	Р	Ы
3	#	3	C	S	c	s	Ѓ	Нь	Б	*	/	М	с	з
4	$	4	D	T	d	t	ё	ћ	ц	1	)	н	С	З
5	%	5	E	U	e	u	Ё	Ћ	Ц	х	3	Н	т	ш
6	&	6	F	V	f	v	є	ќ	д	Х	к	о	Т	Ш
7	’	7	G	W	g	w	Є	Ќ	Д	и	К	О	у	э
8	(	8	H	X	h	x	s	ў	е	И	9	п	У	Э
9	)	9	I	Y	i	y	S	Ў	Е	<	6	-	ж	щ
A	*	:	J	Z	j	z	і	ц	ф	5	=	+	Ж	Щ
B	+	;	K	[	k	{	І	Ц	Ф	7	;	$	в	ч
C	´	<	L	\	l	|	ї	ю	ґ	8	:	(	В	Ч
D	-	=	M	]	m	}	Ї	Ю	Ґ	й	4	П	ь	
E	.	>	N	^	n	~	j	ъ	«	Й	>	я	Ь	■
F	/	?	O	_	o		J	Ъ	»	,	¤	&	№	

SP = Space

7.5 CODEPAGE 866

	2	3	4	5	6	7	8	9	A	B	C	D	E	F
0	SP	0	@	P	`	p	А	Р	а	!	.	J	р	Ё
1	!	1	A	Q	a	q	Б	С	б	"	2	L	с	ё
2	″	2	B	R	b	r	В	Т	в	#	0	Н	т	Є
3	#	3	C	S	c	s	Г	У	г	*	/	F	у	є
4	$	4	D	T	d	t	Д	Ф	д	1	)	В	ф	Ї
5	%	5	E	U	e	u	Е	Х	е	I	3	?	х	ї
6	&	6	F	V	f	v	Ж	Ц	ж	M	?	C	ц	ў
7	’	7	G	W	g	w	З	Ч	з	D	K	O	ч	ў
8	(	8	H	X	h	x	И	Ш	и	@	9	P	ш	°
9	)	9	I	Y	i	y	Й	Щ	й	<	6	-	щ	●
A	*	:	J	Z	j	z	К	Ъ	к	5	=	+	ь	●
B	+	;	K	[	k	{	Л	Ы	л	7	;	$	ы	√
C	´	<	L	\	l	|	М	Ь	м	8	:	&	ъ	№
D	-	=	M	]	m	}	Н	Э	н	E	U	%	з	¤
E	.	>	N	^	n	~	О	Ю	о	A	>	'	ю	■
F	/	?	O	_	o		П	Я	п	,	N	(	я	

SP = Space

7.6 CODEPAGE 869

	2	3	4	5	6	7	8	9	A	B	C	D	E	F
0	SP	0	@	P	`	p		΄Ι	΄ι	!	.	Τ	ζ	–
1	!	1	A	Q	a	q		Ϊ	΄ι	"	2	Υ	η	±
2	″	2	B	R	b	r		Ό	ό	#	0	Φ	θ	υ
3	#	3	C	S	c	s			ύ	*	/	Χ	ι	φ
4	$	4	D	T	d	t			Α	1	)	Ψ	κ	χ
5	%	5	E	U	e	u		Υ	Β	Κ	3	Ω	λ	§
6	&	6	F	V	f	v	Ά	Ύ	Γ	Λ	Π	α	μ	ψ
7	’	7	G	W	g	w		©	Δ	Μ	Ρ	β	ν	∴
8	(	8	H	X	h	x	●	Ώ	Ε	Ν	9	γ	ξ	°
9	)	9	I	Y	i	y	¬	²	Ζ	<	6	-	ο	¨
A	*	:	J	Z	j	z	½	³	Η	5	=	+	π	ω
B	+	;	K	[	k	{	‘	ά	½	7	;	$	ρ	ϋ
C	´	<	L	\	l	|	’	£	Θ	8	:	(	σ	ΰ
D	-	=	M	]	m	}	Έ	έ	Ι	Ξ	U	ό	ς	ώ
E	.	>	N	^	n	~	¯	ή	«	Ο	>	ε	τ	■
F	/	?	O	_	o		Ή	ί	»	,	Σ	&	΄	

SP = Space

7.7 CODEPAGE 852

	2	3	4	5	6	7	8	9	A	B	C	D	E	F
0	SP	0	@	P	`	p	Ç	É	á	!	.	ð	Ó	-
1	!	1	A	Q	a	q	ü	Ĺ	í	"	2	Đ	ß	˝
2	″	2	B	R	b	r	é	Ľ	ó	#	0	Ď	ô	˛
3	#	3	C	S	c	s	â	ô	ú	*	/	Ë	Ń	ˇ
4	$	4	D	T	d	t	ä	ö	Ą	1	)	ď	ń	˘
5	%	5	E	U	e	u	ů	Ľ	ą	Á	3	Ň	ň	§
6	&	6	F	V	f	v	ć	ľ	Ž	Â	Ă	í	Š	÷
7	’	7	G	W	g	w	ç	Ś	ž	Ě	ă	î	š	,
8	(	8	H	X	h	x	ł	ś	Ę	Ş	9	ě	Ŕ	°
9	)	9	I	Y	i	y	ë	Ö	ę	<	6	-	Ú	¨
A	*	:	J	Z	j	z	Ő	Ü	¬	5	=	+	ŕ	˙
B	+	;	K	[	k	{	ő	Ť	ź	7	;	$	Ű	ű
C	´	<	L	\	l	|	î	ť	Č	8	:	(	ý	Ř
D	-	=	M	]	m	}	Ź	Ł	ş	Ż	U	Ţ	Ý	ř
E	.	>	N	^	n	~	Ä	×	«	ż	>	Ů	ţ	■
F	/	?	O	_	o		Ć	č	»	,	¤	■	´	

SP = Space

7.8 KAMENICKY

	2	3	4	5	6	7	8	9	A	B	C	D	E	F
0	SP	0	@	P	`	p	Č	É	á	!	.	J	α	≡
1	!	1	A	Q	a	q	ü	ž	í	"	2	L	β	±
2	″	2	B	R	b	r	é	Ž	ó	#	0	H	Γ	≥
3	#	3	C	S	c	s	ď	ô	ú	*	/	F	∏	≤
4	$	4	D	T	d	t	ä	ö	ň	1	)	B	∑	⌠
5	%	5	E	U	e	u	Ď	ó	Ň	I	3	?	σ	⌡
6	&	6	F	V	f	v	Ť	ů	Ů	M	G	C	µ	÷
7	’	7	G	W	g	w	č	Ú	ô	D	K	O	τ	≈
8	(	8	H	X	h	x	ě	ý	š	@	9	P	Φ	°
9	)	9	I	Y	i	y	Ě	Ö	ř	<	6	-	Θ	•
A	*	:	J	Z	j	z	Ĺ	Ü	ŕ	5	=	+	Ω	•
B	+	;	K	[	k	{	Í	Š	Ŕ	7	;	$!	δ	√
C	´	<	L	\	l	|	ľ	Ľ	¼	8	:	(	ω	ⁿ
D	-	=	M	]	m	}	Í	Ý	§	E	U	%	ø	²
E	.	>	N	^	n	~	Ä	Ř	«	A	>	'	є	■
F	/	?	O	_	o		Á	ť	»	,	N	&	∩	

SP = Space

7.9 ISO LATIN 2

	2	3	4	5	6	7		A	B	C	D	E	F
0	SP	0	@	P	`	p			°	Ŕ	Đ	ŕ	ð
1	!	1	A	Q	a	q		Ą	ą	Á	Ń	á	ń
2	″	2	B	R	b	r		˘	˛	Â	Ň	â	ň
3	#	3	C	S	c	s		Ł	ł	Ă	Ó	ă	ó
4	$	4	D	T	d	t		¤	'	Ä	Ô	ä	ô
5	%	5	E	U	e	u		Ľ	ľ	Ĺ	Ő	ľ	ő
6	&	6	F	V	f	v		Ś	ś	Ć	Ö	ć	ö
7	’	7	G	W	g	w		§	ˇ	Ç	x	ç	÷
8	(	8	H	X	h	x		¨	¸	Č	Ř	č	ř
9	)	9	I	Y	i	y		Š	š	É	Ů	é	ů
A	*	:	J	Z	j	z		Ş	ş	Ę	Ú	ę	ú
B	+	;	K	[	k	{		Ť	ť	Ë	Ű	ë	ű
C	´	<	L	\	l	|		Ź	ź	Ě	Ü	ě	ü
D	-	=	M	]	m	}		-	˝	Í	Ý	í	ý
E	.	>	N	^	n	~		Ž	ž	Î	Ţ	î	ţ
F	/	?	O	_	o			Ż	ż	Ď	ß	ď	●

SP = Space

7.10 MAZOVIA

	2	3	4	5	6	7	8	9	A	B	C	D	E	F
0	SP	0	@	P	`	p	Ç	Ę	Ź	!	.	J	α	≡
1	!	1	A	Q	a	q	ü	ę	Ż	"	2	L	β	±
2	″	2	B	R	b	r	é	ł	ó	#	0	H	Γ	≥
3	#	3	C	S	c	s	â	ô	Ó	*	/	F	π	≤
4	$	4	D	T	d	t	ä	ö	ń	1	)	B	∑	⌠
5	%	5	E	U	e	u	à	Ć	Ń	I	3	?	σ	⌡
6	&	6	F	V	f	v	ą	û	ź	M	G	C	µ	÷
7	’	7	G	W	g	w	ç	ù	ż	D	K	O	τ	≈
8	(	8	H	X	h	x	ê	Ś	¿	@	9	P	Φ	°
9	)	9	I	Y	i	y	ë	Ö	⌐	<	6	-	Θ	●
A	*	:	J	Z	j	z	è	Ü	¬	5	=	+	Ω	●
B	+	;	K	[	k	{	ï	ł	½	7	;	$	δ	√
C	´	<	L	\	l	|	î	Ł	¼	8	:	(	∞	ⁿ
D	-	=	M	]	m	}	ć	Ƴ	i	E	U	%	ø	²
E	.	>	N	^	n	~	Ä	ś	«	A	>	'	є	■
F	/	?	O	_	o		Ą	ƒ	»	,	N	&	∩	

SP = Space

7.11 CODEPAGE 437 HUN

	2	3	4	5	6	7	8	9	A	B	C	D	E	F
0	SP	0	@	P	`	p	Ç	É	á	!	.	J	α	≡
1	!	1	A	Q	a	q	ü	æ	í	"	2	L	β	±
2	″	2	B	R	b	r	é	Æ	ó	#	0	H	Γ	≥
3	#	3	C	S	c	s	â	ő	ú	*	/	F	π	≤
4	$	4	D	T	d	t	ä	ö	ñ	1	)	B	∑	⌠
5	%	5	E	U	e	u	à	ó	Ñ	I	3	?	σ	⌡
6	&	6	F	V	f	v	å	ű	ª	M	G	C	µ	÷
7	’	7	G	W	g	w	ç	Ú	Ő	D	K	O	τ	≈
8	(	8	H	X	h	x	ê	Ü	¿	@	9	P	Φ	°
9	)	9	I	Y	i	y	ë	Ö	⌐	<	6	-	Θ	●
A	*	:	J	Z	j	z	è	Ü	¬	5	=	+	Ω	●
B	+	;	K	[	k	{	ï	¢	½	7	;	$	δ	√
C	´	<	L	\	l	|	î	£	¼	8	:	(	∞	ⁿ
D	-	=	M	]	m	}	Í	¥	i	E	U	%	ø	²
E	.	>	N	^	n	~	Ä	₧	«	A	>	'	ϵ	■
F	/	?	O	_	o		Á	ƒ	»	,	N	&	∩	

SP = Space

7.12 CODEPAGE 852 SEE

	2	3	4	5	6	7	8	9	A	B	C	D	E	F
0	SP	0	Ž	P	ž	p	Ç	É	á	!	.	ð	Ó	-
1	!	1	A	Q	a	q	ü	Ľ	í	"	2	Đ	ß	˝
2	″	2	B	R	b	r	é	ľ	ó	#	0	Ď	Ô	˛
3	#	3	C	S	c	s	â	ô	ú	*	/	Ë	Ń	ˇ
4	$	4	D	T	d	t	ä	ö	Ą	1	)	ď	ń	˘
5	%	5	E	U	e	u	ů	Ľ	ą	Á	3	Ň	ň	§
6	&	6	F	V	f	v	ć	ľ	Ž	Â	Ă	Í	Š	÷
7	’	7	G	W	g	w	ç	Ś	ž	Ě	ă	Î	š	¸
8	(	8	H	X	h	x	ł	ś	Ę	Ş	9	ě	Ŕ	°
9	)	9	I	Y	i	y	ë	Ö	ę	<	6	-	Ú	¨
A	*	:	J	Z	j	z	Ő	Ü	¬	5	=	+	ŕ	˙
B	+	;	K	Š	k	š	ő	Ť	ź	7	;	$	Ű	ű
C	´	<	L	Đ	l	ð	î	ť	Č	8	:	(	ý	Ř
D	-	=	M	Ć	m	ć	Ź	Ł	ş	Ż	U	Ţ	Ý	ř
E	.	>	N	Č	n	č	Ä	×	«	ż	>	Ů	ţ	■
F	/	?	O	_	o		Ć	č	»	,	¤	■	´	

SP = Space

7.13 CODEPAGE 866 LAT

	0	1	2	3	4	5	6	7	8	9	A	B	C	D	E	F
0	∅	▸	SP	0	@	P	'	p	А	Р	а	!	.	Š	р	Ē
1	☺	◂	!	1	A	Q	a	q	Б	С	б	"	2	L	с	ē
2	☻	↕	"	2	B	R	b	r	В	Т	в	#	0	č	т	Ģ
3	♥	‼	#	3	C	S	c	s	⌈	у	г	*	/	Č	у	ķ
4	♦	¶	$	4	D	T	d	t	Д	ф	д	1	)	В	ф	Ķ
5	♣	§	%	5	E	U	e	u	Е	Х	е	Ā	3	?	х	ļ
6	♠	–	&	6	F	V	f	v	Ж	Ц	ж	М	ā	g	ц	Ļ
7	•	↨	'	7	G	W	g	w	З	ц	з	ņ	К	Ī	ч	ž
8	◘	↑	(	8	H	X	h	x	И	Ш	и	@	9	ī	ш	Ž
9	○	↓	)	9	I	Y	i	y	Й	Щ	й	<	6	-	щ	Ō
A	◙	→	*	:	J	Z	j	z	К	Ъ	к	5	=	+	ъ	●
B	♂	←	+	;	K	[	k	{	Л	ы	л	7	;	$	ы	√
C	♀	∟	,	<	L	\	ı	|	М	b	м	8	:	(	ь	N
D	♪	↔	-	=	M	]	m	}	Н	Э	н	ō	4	ū	э	š
E	♫	▲	.	>	N	^	n	~	О	Ю	о	А	>	Ū	ю	■
F	☼	▼	/	?	O	_	o		П	Я	п	,	N	&	я	

SP = Space

7.14 WIN LAT2

	0	1	2	3	4	5	6	7	8	9	A	B	C	D	E	F
0	∅	▸	SP	0	@	P	`	p				°	Ŕ	Đ	ŕ	ð
1	☺	◂	!	1	A	Q	a	q		`	˘	±	Á	Ń	á	ń
2	☻	↕	″	2	B	R	b	r	,	´	˘	˛	Â	Ň	â	ň
3	♥	‼	#	3	C	S	c	s		˝	Ł	ł	Ă	Ó	ă	ó
4	♦	¶	$	4	D	T	d	t	„	”	¤	'	Ä	Ô	ä	ô
5	♣	§	%	5	E	U	e	u	…	•	Ą	µ	Ľ	Ő	ľ	ő
6	♠	_	&	6	F	V	f	v	†	-	₧	¶	Ć	Ö	ć	ö
7	●	↨	'	7	G	W	g	w	‡	—	§	.	Ç	x	ç	÷
8	◘	↑	(	8	H	X	h	x			¨	˛	Č	Ř	č	ř
9	○	↓	)	9	I	Y	i	y	‰	™	©	ą	É	Ů	é	ů
A	◙	→	*	:	J	Z	j	z	Š	š	Ş	ş	Ę	Ú	ę	ú
B	♂	←	+	;	K	[	k	{	<	>	«	»	Ë	Ű	ë	ű
C	♀	∟	,	<	L	\	l	|	Ś	ś	¬	Ł	Ě	Ü	ě	ü
D	♪	↔	-	=	M	]	m	}	Ť	ť	-	″	Í	Ý	í	ý
E	♫	▲	.	>	N	^	n	~	Ž	ž	®	ľ	Î	Ţ	î	ţ
F	☼	▼	/	?	O	_	o		Ź	ź	Ż	ż	Ď	ß	ď	●

SP = Space

Appendix D Philips General Printer (GP) QUICK REFERENCE

The Philips GP Emulation commands are not supported in the Eastern European Version for the printer:

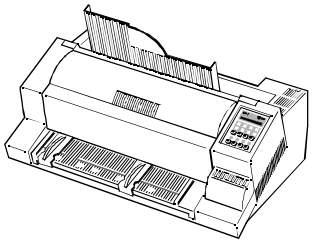

PRINTER TYPE 1

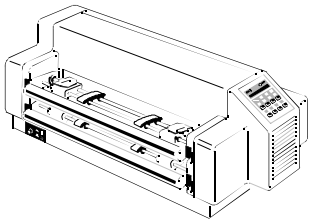

PRINTER TYPE 2

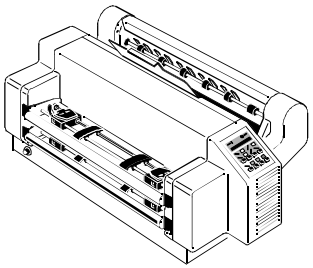

PRINTER TYPE 3

Appendix E IBM ProPrinter Quick Reference

This appendix contains basic information on the IBM ProPrinter 4207, 4208 XL 24 Emulation commands supported in three Printer types:

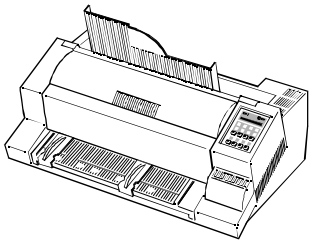

PRINTER TYPE 1

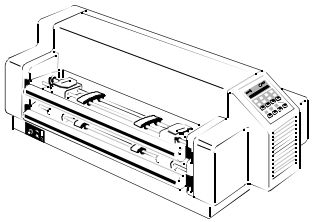

PRINTER TYPE 2

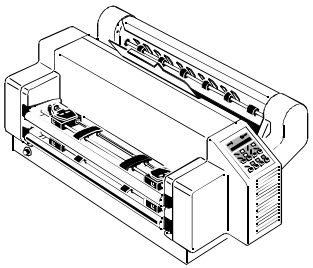

PRINTER TYPE 3

Some commands or parameters may be different for a specific **PRINTER TYPE**. In those cases it will be indicated to which **PRINTER TYPE** a command or parameter applies.

Characters used in control functions appear in monospaced type. Table 1 explains some of the conventions used.

A pair of numbers separated by a slash (/) character indicates Column/Row notation. This notation refers to the location of a character in a standard code table, such as ASCII. (example: 1/B = 1B is the hex-code for Escape)

Spaces appear between characters in sequence for clarity; they are not part of the format.

At the end of this chapter you will find a listing of the IBM ProPrinter Emulation commands classified by Hex Code and a Hex - Decimal conversion table.

The following conventions are used in the command listings:

Table 1 Conventions

ESC	Escape (1/B), introduces an escape sequence
Pn	Numeric parameter, or number of units that specify a distance or quantity pertaining to the escape sequence, control function or control string. Accepted values are 0...9999, may be preceded by + or -. If the parameter is in normal notation like "200" the programming in hex-code is according to a ASCII table. ("200" = 32,30,30 in hex). If the parameter must be programmed in hex-code the notation is with a slash. (1/A = 1A in hex-code)
v1...vn	A series of parameters pertaining to the escape sequence, control function or control string.
SP	Is standing for Space (hex 20)

Table 2: Control Codes

Column/Row	Mnemonic	Function
0/0	NUL	Null
0/8	BS	Backspace
0/9	HT	Horizontal Tab
0/A	LF	Line Feed
0/B	VT	Vertical Tab
0/C	FF	Form Feed
0/D	CR	Carriage Return
0/E	SO	Double Width Printing By Line
0/F	SI	Condensed Printing (17.1 cpi)
1/1	DC1	Select Printer
1/2	DC2	Select Pica (10 cpi)
1/3	DC3	Buffer Data Flow Control
1/4	DC4	Cancel Double Width Printing By Line
1/8	CAN	Cancel Buffer
1/B	ESC	Initiate Escape Sequence
2/0	SP	Space
7/F	DEL	Delete
1/B 6/A	ESC j	Set Printer Off Line
1/B 5/1 2/3	ESC Q	Deselect Printer
1/B 5/1 2/4	ESC Q	Deselect Printer

Table 3: Vertical Form Handling

Escape Sequence	Mnemonic	Function
ESC 0		Set Line Space to $^{1}/_{8}$"
ESC 1		Set Line Space to $^{7}/_{72}$"
ESC 2		Start Variable Line Space
ESC 4		Set Top of Form
ESC 5 P1		Automatc Line Feed ON/OFF P1 = 1 or 0/1: select CR + LF P1 = 0 or 0/0: no LF
ESC A P1		Set Line Space to $^{P1}/_{72}$" ($^{P1}/_{60}$") P1 = $^{P1}/_{72}$" lpi (non AGM) P1 = $^{P1}/_{60}$" lpi (AGM) (P1 = 0/1...5/5) ***Note:*** Default = $^{12}/_{72}$" or 6 lpi
ESC B *NUL*		Clear all Vertical Tabs
ESC B P1 P2 . . . P64 *NUL*		Set Vertical Tabs (Pn = 0/1...F/F)
ESC C P1		Set Form Length in Lines (P1 = 0/1...7/F)
ESC C *NUL* P1		Set Form Length in Inch (P1 = 0/1...1/6)
ESC N P1		Set Automatic Perforation Skip P1: is the number of lines from bottom of paper to skip. (P1 = 0/0...F/F)
ESC O		Cancel Automatic Perforation Skip
ESC [\ *EOT NUL NUL NUL* P1 *NUL*		Set Line Space Unit EOT = 0/4 P1 = B/4 : select 1/180" P1 = D/8 : select 1/216" P1 = 0/0 : setting remains unchanged

Table 3 (Cont.): Vertical Form Handling

Escape Sequence	Mnemonic	Function
ESC]		Reverse Line Feed
ESC] > s *Native Command*	IF	Insert Form
ESC [> P1 ; P2 ; P3 ; P4 s *Native Command*	SPSIF	Select Paper Source and Insert Form, Print Gap, Paper Exit, Cut-Mode (any parameter > or P may be skipped, see following alternative command sequences); > = Insert Form
ESC [P1 s *Native Command*	SPS	Paper Source: P1 = 0 : Manual Feed ****)** P1 = 1 : ASF, Bin 1 ***)** P1 = 2 : ASF, Bin 2 ***)** P1 = 3 : ASF, Bin 3 ***)** P1 = 6 : upper Tractor *****)** P1 = 7 : Tractor Feed (lower Tractor) P1 = 8 : ASF, Bins 1 or 2 ***)** P1 = 9 : ASF, Bins 2 or 3 ***)** P1 = 1 0 : ASF, Bins 1 or 2 or 3 ***)** P1 = 1 5 : upper and lower tractor *****)**
ESC [; P2 s *Native Command*	AGC/PCC	Procedure: P2 = 0 : Automatic Gap Control P2 = 1 : Print Gap for 1-ply copy P2 = 2 : Print Gap for 2-ply copies P2 = 3 : Print Gap for 3-ply copies P2 = 4 : Print Gap for 4-ply copies P2 = 5 : Print Gap for 5-ply copies P2 = 6 : Print Gap for 6-ply copies

****)** only **PRINTER TYPE 1** and **PRINTER TYPE 2**
***)** only **PRINTER TYPE 1**
*****)** only **PRINTER TYPE 2** and **PRINTER TYPE 3**

Table 3 (Cont.): Vertical Form Handling

Escape Sequence	Mnemonic	Function
ESC [; ; P3 s *Native Command*		Paper Exit: P3 = 0 : Paper Exit Stacker *****)** P3 = 1 : Paper Exit Front Side ***)** (confirmed by Start/Stop key) P3 = 2 : Paper Exit Front Side ***)** (not confirmed by Start/Stop key, controlled by application) P3 = 3 : Batch output; rear side
ESC [; ; ; P4 s *Native Command*		Cut Mode On/Off: ******)** P4 = 0 : Cut Mode Off P4 = 1 : Cut Mode On P4 = 2 : Cut on actual position (cutting edge is approximate 4 mm above the base of the actual line)

*****)** only **PRINTER TYPE 1** and **PRINTER TYPE 3**
***)** only **PRINTER TYPE 1**
******)** only **PRINTER TYPE 3**

Table 4: Horizontal Form Handling and Printing Modes

Escape Sequence	Function
ESC :	Select Elite (12 cpi)
ESC - P1	Cancel / Select Underline P1 = 0/0 cancel Underline Printing P1 = 0/1 set Underline Printing
ESC _ P1	Cancel / Select Overline Printing P1 = 0/0 cancel Overline Printing P1 = 0/1 set Overline Printing
ESC [@ *EOT NUL NUL NUL* P1 P2	Double, Multiple -Width/ - Height Mode P1 controls line spacing (e.g. 0/x) and character height (e.g. x/0) P2 controls character width P1 = 0/x line spacing unchanged P1 = 1/x single line space P1 = 2/x double line space P1 = 3/x triple line space P1 = 4/x quadruple line space P1 = x/0 charcter height unchanged P1 = x/1 single charcter height P1 = x/2 double character height P1 = x/3 triple character height P1 = x/4 quadruple character height P2 = 0/0 character width unchanged P2 = 0/1 single character width P2 = 0/2 double character width P2 = 0/3 triple character width P2 = 0/4 quadruple character width
Example:	Coding to select "double line space", "double character height", and "double character width" in Hex: 1B 5B 40 04 00 00 00 22 02
ESC D *NUL*	Clear all Horizontal Tabs
ESC D P1 P2 ... P32 *NUL*	Set Horizontal Tabs (P1...P32 = 0/1...F/F)

Table 4 (Cont.): Horizontal Form Handling and Printing Modes

Escape Sequence	Function
ESC E	Select Emphasized Printing (bold)
ESC F	Cancel Emphasized Printing (bold)
ESC G	Select Double Strike Printing (bold)
ESC H	Cancel Double Strike Printing
ESC I P1	Select Character Mode P1 = 0/0 : Draft, 10 cpi P1 = 0/1 : Draft, Proportional P1 = 0/2 : Courier, 10 cpi P1 = 0/3 : Courier, Proportional P1 = 0/8 : Draft, 12 cpi P1 = 0/A : Courier, 12 cpi P1 = 1/0 : Draft, 17 cpi P1 = 1/2 : Courier, 17 cpi
ESC P P1	Cancel / Select Proportional Printing P1 = 0/0 or 0 : cancel Proportional P1 = 0/1 or 1 : select Proportional
ESC R	Restore Horizontal Tabs to Default
ESC S P1	Select Superscript/Subscript P1 = 0/0 or 0 : select Superscript P1 = 0/1 or 1 : select Subscript
ESC T	Cancel Superscript/Subscript
ESC U P1	Cancel / Select Unidirectional Printing P1 = 0/0 or 0 : cancel Unidirectional P1 = 0/1 or 1 : select Unidirectional

Table 4 (Cont.): Horizontal Form Handling and Printing Modes

Escape Sequence	Mnemonic	Function
ESC W P1		Cancel / Select Double Width P1 = 0/0 or 0 : cancel Double Width P1 = 0/1 or 1 : select Double Width
ESC X P1 P2		Set Left and Right Margins P1 : Left Margin P2 : Right Margin (Pn = 0/0...F/F)
ESC d P1 P2		Set Relative Horizontal Dot Position (P1 + P2 x 256)/120" (Pn = 0/0...F/F)
ESC <		Home Position of Printhead (left margin)
ESC ;		Set Left Margin at Current Position
ESC [P1 *SP* r *Native Command*	SPQ	Select Print Quality LQ / NLQ P1 = 0 : LQ P1 = 1 : NLQ

Table 4 (Cont.): Horizontal Form Handling and Printing Modes

Escape Sequence	Mnemonic	Function
ESC [P1 ; P2 x *Native Command*	CPL	Select Font and Character Pitch (parameter P1 or P2 may be skipped, see following alternative command sequences)
ESC [P1 x *possible format of* *Native Command CPL*		P1 selects the font P1 = 0 or missing : Font is unchanged P1 = 1 : Data P1 = 2 : Roman P1 = 3 : San Serif P1 = 4 : Courier P1 = 5 : Prestige P1 = 6 : Script P1 = 7 : OCR B P1 = 8 : OCR A P1 = 9 : Orator-C P1 = 10 : Orator P1 = 11 : Data Large
ESC [; P2 x *possible format of* : Pitch is unchanged *Native Command CPL*		P2 selects the character pitch P2 = 0 or missing P2 = 1 : 10 cpi P2 = 2 : 12 cpi P2 = 3 : 15 cpi P2 = 4 : (proportional) P2 = 5 : proportional P2 = 6 : 14.4 cpi P2 = 7 : 18 cpi P2 = 8 : 17 cpi P2 = 9 : 20 cpi

Table 5: Character Set Selection

Escape Sequence	Mnemonic	Function
ESC 6		Select Character Set 2
ESC 7		Select Character Set 1
ESC \ P1 P2		Print from All Character Set Number of codes = (P1 + P2 * 256) (Pn = 0/0...F/F)
ESC ^ P1		Print Single Character from All Character Set P1 = Number of Char. Set or Code Page (Pn = 0/0...F/F)
ESC [T n1 n2 NUL NUL P1 P2		Code Page Switching n1 = 4, n2 = 0 P1 P2 for Code-Page number, most significant byte first. P1 P2 1 181 : CP 437 U.S.A. 3 82 : CP 850 Multilingual 3 90 : CP 858 Multilingual + Euro 3 92 : CP 860 Portugal 3 95 : CP 863 French 3 97 : CP 865 Norway

Table 6: Graphics Modes

Escape Sequence	Mnemonic	Function
ESC 3 P1		Set Line Space to $^{P1}/_{216}$" ($^{P1}/_{180}$") $^{P1}/_{216}$ lpi (non AGM), $^{P1}/_{180}$ lpi (AGM) (P1 = 0/1...F/F)
ESC J P1		Perform $^{P1}/_{216}$" ($^{P1}/_{180}$") Line Feed $^{P1}/_{216}$ lpi (non AGM), $^{P1}/_{180}$ lpi (AGM) (P1 = 0/0...F/F)
ESC K P1 P2 v1 . . . vn		Standard Density Graphics Mode (P1 + P2 * 256) = number of data (Pn = 0/0...F/F)
ESC L P1 P2 v1 . . . vn		Double Density Graphics Mode (P1 + P2 * 256) = number of data (Pn = 0/0...F/F)
ESC Y P1 P2 v1 . . . vn		Double Speed & Density Graphics Mode (P1 + P2 * 256) = number of data (Pn = 0/0...F/F)
ESC Z P1 P2 v1 . . . vn		Quadruple Density Graphics Mode (P1 + P2 * 256) = number of data (Pn = 0/0...F/F)

Table 6 (Cont.): Graphics Modes

Escape Sequence	Mnemonic	Function
ESC [g P1 P2 P3 v1 . . . vn		Select Various Graphics Modes (IBM) P1 + P2 * 256 = number of data bytes + 1 (P1,P2 = 0/0...F/F) v1 .. vn = binary data in hex code

Parameter Table Graphic Density:

P3	Graphic type	dots per column	max. of columns	hor. density (dpi)	vert. density no AGM	vert. density AGM	
0/0	Standard Density (K)	8	816	60	72	60	
0/1	Double Density (L)	8	1632	120	72	60	
0/2	2xDensity / 2xSpeed (Y)	8	1632	120	72	60	*)
0/3	Quadruple Density (Z)	8	3264	240	72	60	*)
0/8	Standard Density	24	816	60	180	180	
0/9	Double Density	24	1632	120	180	180	
0/B	Triple Density	24	2448	180	180	180	
0/C	Hex Density	24	4896	360	180	180	*)

*) *consecutive horizontal dots cannot be printed.*

Example: box 8x8 dots with center point 2x2 dots, standard density, 8 dots / column
hex: 1B 5B 67 09 00 00 FF 81 81 99 99 81 81 FF

Table 7: Further Control Sequences, supported by IBM Emulation Mode (Native Commands)

Escape Sequence	Mnemonic	Function
ESC [	$$	Control String Introducer (CSI) for 'ESC ['
ESC	$$/	Control String Introducer (CSI) for 'ESC'
ESC * P1 P2 P3 v1 . . . vn		Select Various Graphics Modes P2 + P3 * 256 = number of columns (P2,P3 = 0/0...F/F) v1 .. vn = binary data in hex code

Parameter Table Graphic Density:

P1	Graphic type	dots per column	max. of columns	hor. density (dpi)	vert. density no AGM	vert. density AGM	
0/0	Standard Density (K)	8	816	60	72	60	
0/1	Double Density (L)	8	1632	120	72	60	
0/2	2xDensity / 2xSpeed (Y)	8	1632	120	72	60	*)
0/3	Quadruple Density (Z)	8	3264	240	72	60	*)
0/4	CRT I	8	1088	80	72	60	
0/5	Plotter	8	979	72	72		
0/6	CRT II	8	1224	90	72	60	
0/B	Double Density Plotter	8	1958	144	72		*)
2/0	Standard Density	24	816	60	180	180	
2/1	Double Density	24	1632	120	180	180	
2/6	CRT III	24	1224	90	180	180	
2/7	Triple Density	24	2448	180	180	180	
2/8	Hex Density	24	4896	360	180	180	*)

*) *consecutive horizontal dots cannot be printed.*

Example: box 8x8 dots with center point 2x2 dots, standard density, 8 dots / column
hex: 1B 2A 00 08 00 FF 81 81 99 99 81 81 FF

Table 7 (Cont.): Further Control Sequences, supported by IBM Emulation Mode (Native Commands)

Escape Sequence	Mnemonic	Function
ESC [P1 ; P2 w	SNVCT	Set National Version and Code Table P1 = 1 - 15 national version depending on selected character set (see Appendix C Char. Set Tables) P2 = 3 digit code of the code table (see command SCT) P1 for national version **IBM SET 2**: P1 = 1 : U.S.A P1 = 2 : France P1 = 3 : Germany P1 = 4 : U.K. P1 = 5 : Denmark P1 = 6 : Sweden P1 = 7 : Italy P1 = 8 : Spain P1 = 9 : Japan P1 = 1 0 : Norway P1 = 1 1 : Denmark 2 P1 = 1 2 : Spain 2 P1 = 1 3 : Latin AM P1 = 1 4 : Turkey P1 for **IBM CODE PAGE:** P1 = 1 : CP 437 P1 = 2 : CP 850 P1 = 3 : CP 860 P1 = 4 : CP 863 P1 = 5 : CP 865 P1 = 6 : CP 858 P1 for **CODE PAGE EE**: P1 = 1 : CP 437 GK P1 = 2 : CP 851 GK P1 = 3 : CP 928 GK P1 = 4 : CP 855 CYRI P1 = 5 : CP 866 P1 = 6 : CP 869 P1 = 7 : CP 852 P1 = 8 : KAMENICKY P1 = 9 : ISO LATIN 2 P1 = 1 0 : MAZOVIA P1 = 1 1 : CP 437 HUN P1 = 1 2 : CP 852 SEE P1 = 1 3 : CP 866 LAT P1 = 1 4 : WIN LAT2
ESC [; P2 w	SCT	Set Code Table P2 = 3 bit code of the code table P2 = 0 6 1 : IBM Set 1 P2 = 0 6 2 : IBM Set 2 P2 = 0 6 3 : IBM Code Page P2 = 0 7 1 : EPSON Ext. G. C. T P2 = 1 0 0 : CODE PAGES EE

Table 7 (Cont.): Further Control Sequences, supported by IBM Emulation Mode (Native Commands)

Escape Sequence	Mnemonic	Function
ESC [P1 ; P2 *SP* r	SM #	Select Macro and Change Emulation P1 = 1: Macro 1 P1 = 2: Macro 2 P1 = 3: Macro 3 P1 = 4: Macro 4 P2 = 0: no change of emulation P2 = 1: EPSON Emulation P2 = 2: IBM ProPrinter Emulation P2 = 3: IBM ProPrinter AGM Emulation P2 = 4: EPSON Emulation
ESC M	RLF	Reverse Line Feed
ESC [< s	EJF	Eject Form
ESC [P1 ; P2 *SP* B	GSM	Graphic Size Modification P1 = 1 0 0 : normal height P1 = 2 0 0 : normal height P1 = 3 0 0 : normal height P1 = 4 0 0 : quadruple height P1 = max. **8 0 0** in steps of 100 P2 = 1 0 0 : normal width P2 = 2 0 0 : double width P2 = 3 0 0 : triple width P2 = 4 0 0 : quadruple width P2 = max. **8 0 0** in steps of 100 Graphic Size Modification for **DATA LARGE** P1 = 1 0 0 : normal height P2 = 1 0 0 : normal width P1 and P2 max. **9 9 0 0** in steps of 100
ESC [P1 `	HPA	Set Horizontal Position Absolute P1 = print column (P1 = 0...9999)

Table 7 (Cont.): Further Control Sequences, supported by IBM Emulation Mode (Native Commands)

Escape Sequence	Mnemonic	Function
ESC [P1 a	HPR	Set Horizontal Position Relative P1 = print column (P1 = 0...9999)
ESC [P1 b	RPT	Repeat Character P1 = number of repetitions (P1 = 1...999)
ESC [P1 d	VPA	Set Vertical Position Absolute P1 = 0 or 1: Top of Form / Top Margin P1 = 2... 9999: Vertical Line
ESC [P1 e	VPR	Set Vertical Position Relative P1 = 0 or 1: moves the position one line P1 = 2... 9999: Vertical Line
ESC [P1 g	TBC	Tabulation Clear P1 = 0: at active print pos. all tabs and margin marker, P1 = 3: all horizontal-, P1 = 4: all vertical tabs and margin marker
ESC [P1 w	SNV	Set National Version P1 = 1 - 14 national version depending on selected character set (see SNVCT and Appendix C Character Set Tables)
ESC [P1 {	LSL	Line Space Load P1 = 1, 2, 3, 4, 6, 8, 12, 16, 24, 48, 60, 72, 90, 144, 180, 360

Table 7 (Cont.): Further Control Sequences, supported by IBM Emulation Mode (Native Commands)

Escape Sequence	Mnemonic	Function
ESC [P1 m	SGR	Set Graphic Rendition P1 = 0: default - no rendition or rendition reset P1 = 1: bold P1 = 3: italics P1 = 4: underline P1 = 9: crossed out or strike through printing P1 = 20: enlarged double width printing P1 = 21: double underline P1 = 22: bold reset P1 = 23: italics reset P1 = 24: underline reset P1 = 29: crossed out reset P1 = 30: black ***)** P1 = 31: orange ***)** P1 = 32: green ***)** P1 = 33: yellow ***)** P1 = 34: purple ***)** P1 = 35: magenta (red) ***)** P1 = 36: cyan (blue) ***)** P1 = 53: over lined P1 = 55: over lined reset

***)** only **PRINTER TYPE 1**

Table 7 (Cont.): Further Control Sequences, supported by IBM Emulation Mode (Native Commands)

Escape Sequence	Mnemonic	Function
ESC [; P2 ; P3 ; P4 ; P5 ; P6 ; P7 *SP* z *see Appendix G* *BARCODE Programming*	BH	Barcode Header P2: Barcode typ P3: Height of barcode P4: Width of the thin bars P5: Width of the thin gaps P6: Ratio width to thin P7: Uni-directional or bi-directional printing 0 : or not programmed: means no changes 1 : uni-directional printing in LQ 2 : bi-directional printing in LQ 3 : uni-directional printing in NLQ 4 : bi-directional printing in NLQ
	Note:	A switch from uni-directional to bi-directional printing is only possible if the parameter **UNI-DIRECT.CMD** is set to **YES** via operator panel or ESC-sequence.
ESC [? 0 h	SMBC	Set Mode Barcode
ESC [? 0 ***l***	RSBC	Reset Mode Barcode

Hex Code	Format	Page
00	Null	E-3
08	Backspace	E-3
09	Horizontal Tab	E-3
0A	Line Feed	E-3
0B	Vertical Tab	E-3
0C	Form Feed	E-3
0D	Carriage Return	E-3
0E	Select Double Width (one line)	E-3
0F	Select Condensed Mode (17,1 cpi)	E-3
11	Select Printer	E-3
12	Select Pica (10 cpi)	E-3
13	Buffer Data Flow Control	E-3
14	Cancel Double Width	E-3
18	Cancel Buffer	E-3
1B	Escape	E-3
20	Space	E-3
7F	Delete	E-3
1B 30	Set Line Space to $^{1}/_{8}$"	E-4
1B 31	Set Line Space to $^{7}/_{72}$"	E-4
1B 32	Start Variable Line Space	E-4
1B 34	Set Top Of Form	E-4
1B 36	Select Character Set 2	E-11
1B 37	Select CHaracter Set 1	E-11
1B 3A	Select Elite (12 cpi)	E-7
1B 3B	Set Left Margin at Current	E-9
1B 3C	Home Position of Printhead	E-9
1B 45	Select Emphasized (bold)	E-8
1B 46	Cancel Emphasized	E-8
1B 47	Select Double Strike (bold)	E-8
1B 48	Cancel Double Strike	E-8
1B 4D	Reverse Line Feed	E-16
1B 4F	Cancel Automatic Perforation Skip	E-4
1B 52	Restore Horizontal Tabs to Default	E-8

Hex Code	Format	Page
1B 54	Cancel Superscript/Subscript	E-8
1B 5D	Reverse Line Feed	E-5
1B 6A	Set Printer Off Line	E-3
24 24	Control String Introducer for ESC [	E-14
24 24 2F	Control String Introducer for ESC	E-14
1B 2D 00 / 1B 2D 01	Cancel / Select / Underline	E-7
1B 33 P_1	Set Line Space to $^{P1}/_{216}$" ($^{P1}/_{180}$")	E-12
1B 35 01 / 1B 35 00	Automatic Line Feed ON/OFF	E-4
1B 41 P_1	Set Line Space to $^{P1}/_{72}$" ($^{P1}/_{60}$")	E-4
1B 42 00	Clear all Vertical Tabs	E-4
1B 43 P_1	Set Form Length in Lines	E-4
1B 44 00	Clear all Horizontal Tabs	E-7
1B 49 P_1	Select Character Mode	E-8
1B 4A P_1	Perform $^{P1}/_{216}$" ($^{P1}/_{180}$") Line feed	E-12
1B 4E P_1	Set Skip Over Perforation	E-4
1B 50 00 / 1B 50 01	Cancel / Select Proportional	E-8
1B 51 23 or 1B 51 24	Deselect Printer	E-3
1B 53 00 / 1B 53 01	Select Superscript / Subscipt	E-8
1B 55 00 / 1B 55 01	Cancel / Select Unidirectional Printing	E-8
1B 57 00 / 1B 57 01	Cancel / Select Double Width	E-9
1B 5E P_1	Single Character from All Char. Set	E-11
1B 5F 00 / 1B 5F 01	Cancel / Select Overline	E-7
1B 2A P_1 P_2 P_3 data	Select Various Graphics Modes	E-14
1B 42 P_1....P_{64} 00	Set Vertical Tabs	E-4
1B 43 00 P_1	Set Form Lenght in Inches	E-4
1B 44 P_1...P_n 00	Set Horizontal Tabs	E-7
1B 4B P_1 P_2 data	Standard Density Graphics Mode	E-12
1B 4C P_1 P_2 data	Double Density Graphics Mode	E-12
1B 58 P_1 P_2	Set Left and Right Margins	E-9
1B 59 P_1 P_2 data	Double Speed & Double Density Graphics Mode	E-12
1B 5A P_1 P_2 data	Quadruple density Graphics Mode	E-12
1B 5B 3B P_2 73	AGC / PCC Procedure	E-5

Hex Code	Format	Page
1B 5B 3B P_2 77	Set Code Table	E-15
1B 5B 3B P_2 3B P_3 3B P_4 3B P_5 3B P_6 3B P_7 20 7A	Barcode Header	E-20
1B 5B 3C 73	Eject Form	E-16
1B 5B 3E 73	Insert Form	E-5
1B 5B 3E P_1 3B P_2 3B P_3 3B P_4 73	Select Paper Source and Insert Form	E-5
1B 5B 3F 30 68	Set Mode Barcode	E-20
1B 5B 3F 30 6C	Reset Mode Barcode	E-20
1B 5B 40 04 00 00 00 P_1 P_2	Double, Multible -Width/-Height Mode	E-7
1B 5B 54 n_1 n_2 NUL NUL P_1 P_2	Code Page Switching	E-11
1B 5B 5C 04 00 00 00 P_1 00	Select Line Space Unit	E-4
1B 5B 67 P_1 P_2 P_3 data	Select Various Graphics Modes (IBM)	E-13
1B 5B P_1 20 58	Select Print Quality LQ / NLQ	E-9
1B 5B P_1 3B P_2 20 72	Select Macro and Change Emulation	E-16
1B 5B P_1 3B P_2 20 42	Graphic Size Modification	E-16
1B 5B P_1 3B P_2 77	Set National Version and Code Table	E-15
1B 5B P_1 3B P_2 78	Select Font and Character Pitch	E-10
1B 5B P_1 60	Set Horizontal Position Absolute	E-16
1B 5B P_1 61	Set Horizontal Position Relative	E-17
1B 5B P_1 62	Repeat Character	E-17
1B 5B P_1 64	Set Vertical Position Absolute	E-17
1B 5B P_1 65	Set Vertical Position Relative	E-17
1B 5B P_1 67	Tabulation Clear	E-17
1B 5B P_1 6D	Set Graphic Rendition	E-18
1B 5B P_1 73	Select Paper Source	E-5
1B 5B P_1 77	Set National Version	E-17
1B 5B P_1 7B	Line Space Load	E-17
1B 5C P_1 P_2	Print from All Character Set	E-11
1B 64 P_1 P_2	Set Relative Horizontal Dot Position	E-9

Hex - Decimal Conversion Table

	0	1	2	3	4	5	6	7	8	9	A	B	C	D	E	F
0	0	16	32	48	64	80	96	112	128	144	160	176	192	208	224	240
1	1	17	33	49	65	81	97	113	129	145	161	177	193	209	225	241
2	2	18	34	50	66	82	98	114	130	146	162	178	194	210	226	242
3	3	19	35	51	67	83	99	115	131	147	163	179	195	211	227	243
4	4	20	36	52	68	84	100	116	132	148	164	180	196	212	228	244
5	5	21	37	53	69	85	101	117	133	149	165	181	197	213	229	245
6	6	22	38	54	70	86	102	118	134	150	166	182	198	214	230	246
7	7	23	39	55	71	87	103	119	135	151	167	183	199	215	231	247
8	8	24	40	56	72	88	104	120	136	152	168	184	200	216	232	248
9	9	25	41	57	73	89	105	121	137	153	269	185	201	217	233	249
A	10	26	42	58	74	90	106	122	138	154	170	186	202	218	234	250
B	11	27	43	59	75	91	107	123	139	155	171	187	203	219	235	251
C	12	28	44	60	76	92	108	124	140	156	172	188	204	220	236	252
D	13	29	45	61	77	93	109	125	141	157	173	189	205	221	237	253
E	14	30	46	62	78	94	110	126	142	158	174	190	206	222	238	254
F	15	31	47	63	79	95	111	127	143	159	175	191	207	223	239	255

Appendix F EPSON LQ 2550 and ESC/P2 Quick Reference

This appendix contains basic information on the EPSON LQ 2550 Printer Emulation commands supported in three Printer types:

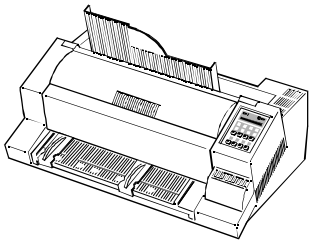

PRINTER TYPE 1

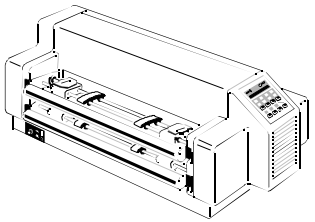

PRINTER TYPE 2

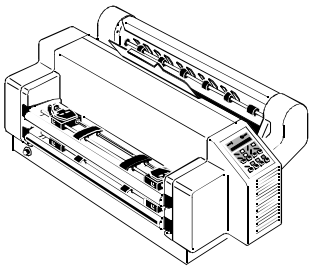

PRINTER TYPE 3

Some commands or parameters may be different for a specific **PRINTER TYPE**. In those cases it will be indicated to which **PRINTER TYPE** a command or parameter applies.

Characters used in control functions appear in monospaced type. Table 1 explains some of the conventions used.

A pair of numbers separated by a slash (/) character indicates Column/Row notation. This notation refers to the location of a character in a standard code table, such as ASCII. (example: 1/B = 1B is the hex-code for Escape)

Spaces appear between characters in sequence for clarity; they are not part of the format.

At the end of this chapter you will find a listing of the EPSON LQ 2550 Emulation commands classified by Hex Code and a Hex - Decimal conversion table.

The following conventions are used in the command listings:

Table 1 Conventions

ESC	Escape (1/B), introduces an escape sequence
P1	Numeric parameter, or number of units that specify a distance or quantity pertaining to the escape sequence, control function or control string. Accepted values are 0...9999, may be preceded by + or -. If the parameter is in normal notation like "200" the programming in hex-code is according to a ASCII table. ("200" = 32,30,30 in hex). If the parameter must be programmed in hex-code the notation is with a slash. (1/A = 1A in hex-code)
v1...vn	A series of parameters pertaining to the escape sequence, control function or control string.
SP	Is standing for Space (hex 20)

Table B-2: Control Codes

Column/Row	Mnemonic	Function
0/0	NUL	Null
0/8	BS	Backspace
0/9	HT	Horizontal Tab
0/A	LF	Line Feed
0/B	VT	Vertical Tab
0/C	FF	Form Feed
0/D	CR	Carriage Return
0/E	SO	Double Width Printing By Line
0/F	SI	Condensed Printing
1/1	DC1	Select Printer
1/2	DC2	Select Pica (10 cpi)
1/3	DC3	Deselct Printer
1/4	DC4	Cancel Double Width Printing By Line
1/8	CAN	Cancel Buffer
1/B	ESC	Initiate Escape Sequence
2/0	SP	Space
7/F	DEL	Delete

Table B-3: Terminal Management

Escape Sequence	Mnemonic	Function
ESC @		Initialize Printer
ESC =		Set Most Significant Bit to 0
ESC >		Set Most Significant Bit to 1
ESC #		Cancel Most Significant Bit Control

Table B-4: Vertical Form Handling

Escape Sequence	Mnemonic	Function
ESC 0		Set Line Space to $^{1}/_{8}$"
ESC 2		Set Line Space to $^{1}/_{6}$"
ESC 3 P1		Set Line Space to $^{P1}/_{180}$" (P1 = 0...255)
ESC + P1		Set Line Space to $^{P1}/_{360}$" (P1 = 0/0...F/F)
ESC A P1		Set Line Space to $^{P1}/_{60}$" (P1 = 0/0...0/F)
ESC B *NUL*		Clear Vertical Tabs
ESC B P1 P2 . . . P16 *NUL*		Set Vertical Tabs (P1...P16 = 0/1...F/F)
ESC C P1		Set Form Length in Lines (P1 = 0/1...F/F)
ESC C *NUL* P1		Set Form Length in Inches (P1 = 0/1...0/C)
ESC J P1		Perform $^{P1}/_{180}$" Line Feed (P1 = 0/0...F/F)
ESC N P1		Set Automatic Perforation Skip P1 is the number of lines from bottom of paper to skip. (P1 = 0/1...7/F)
ESC O		Cancel Automatic Perforation Skip
ESC b P1 P2 .. P16 *NUL*		Set Vertical Tabs in Channel P1 P1 = 0/0 .. 0/7 : channel 0 - 7 P2..P16 = line number (P2..P16 = 0/1..F/F)
ESC b P1 *NUL*		Clear all Tabs in Channel P1 P1 = 0/0 .. 0/7 : channel 0 - 7
ESC j P1		Perform $^{P1}/_{180}$" Reverse Line Feed (P1 = 0/0...F/F)
ESC / P1		Select Vertical Tab Channel P1 = 0/0 .. 0/7 : channel 0 .. 7

Table B-4: (Cont.) Vertical Form Handling

Escape Sequence	Mnemonic	Function
ESC *EM* P1		Form Feed and ASF Control ***)** *EM* = 1/9 P1 = 0/1 or 1: ASF Bin 1 P1 = 0/2 or 2: ASF Bin 2 P1 = 0/3 or 3: ASF Bin 3 P1 = 8/2 or R: (5/2) eject sheet
ESC [> P1 ; P2 ; P3 ; P4 s *Native Command*	SPSIF	Select Paper Source and Insert Form, Print Gap, Paper Exit, Cut-Mode (any parameter > or P1 to P4 may be skipped, see following alternative command sequences); > = Insert Form
ESC [P1 s *Native Command*	SPS	Paper Source: P1 = 0 : Manual Feed ****)** P1 = 1 : ASF, Bin 1 ***)** P1 = 2 : ASF, Bin 2 ***)** P1 = 3 : ASF, Bin 3 ***)** P1 = 6 : upper Tractor *****)** P1 = 7 : Tractor Feed (lower Tractor) P1 = 8 : ASF, Bins 1 or 2 ***)** P1 = 9 : ASF, Bins 2 or 3 ***)** P1 = 1 0 : ASF, Bins 1 or 2 or 3 ***)** P1 = 1 5 : upper and lower tractor *****)**
ESC [; P2 s *Native Command,* *see also GP Emulation*	AGC/PCC	Print Gap Control: P2 = 0 : Automatic Gap Control P2 = 1 : Print Gap for 1-ply copy P2 = 2 : Print Gap for 2-ply copies P2 = 3 : Print Gap for 3-ply copies P2 = 4 : Print Gap for 4-ply copies P2 = 5 : Print Gap for 5-ply copies P2 = 6 : Print Gap for 6-ply copies

***)** only **PRINTER TYPE 1**
****)** only **PRINTER TYPE 1** and **PRINTER TYPE 2**
*****)** only **PRINTER TYPE 2** and **PRINTER TYPE 3**

Table B-4: (Cont.) Vertical Form Handling

Escape Sequence	Mnemonic	Function
ESC [; ; P3 s *Native Command*		Paper Exit: P3 = 0 : Paper Exit Stacker *****)** P3 = 1 : Paper Exit Front Side ***)** (confirmed by Start/Stop key) P3 = 2 : Paper Exit Front Side ***)** (not confirmed by Start/Stop key, controlled by application) P3 = 3 : Batch output; rear side
ESC [; ; ; P4 s *Native Command*		Cut Mode On/Off: ******)** P4 = 0 : Cut Mode Off P4 = 1 : Cut Mode On P4 = 2 : Cut on actual position (cutting edge is approximate 4 mm above the base of the actual line)

*****)** only **PRINTER TYPE 1** and **PRINTER TYPE 3**
***)** only **PRINTER TYPE 1**
******)** only **PRINTER TYPE 3**

Table B-5: Horizontal Form Handling and Printing Modes

Escape Sequence	Function
ESC *SO*	Select Double Width for One Line
ESC *SI*	Select Condensed 10 cpi -> 17 cpi 12 cpi -> 20 cpi 15 cpi -> 15 cpi (unchanged) proportional -> proportional cond.
ESC *SP* P1	Select Intercharacter Space Unit 1/120" for DRAFT (P1 = 0/0...7/F) Unit 1/180" for NLQ/LQ (P1 = 0/0...7/F)
ESC ! P1	Select Multiple Print Mode P1 selects: Bit0 = 0 : 10 cpi (Pica) Bit0 = 1 : 12 cpi (Elite) Bit1 = 1 : proportional Bit2 = 1 : Condensed Bit3 = 1 : Emphasized Bit4 = 1 : Double Strike Bit5 = 1 : Double Width Bit6 = 1 : Italics Bit7 = 1 : Underline
ESC $ P1 P2	Set Absolute Horizontal Position (P1 + P2 * 256) * $^1/_{60}$" (P1 = 0/0...F/F) (P2 = 0/0...0/3)
ESC \ P1 P2	Set Relative Horizontal Position Draft: (P1 + P2 * 256) * $^1/_{120}$" (P1 = 0/0...F/F) (P2 = 0/0...0/6) NLQ/LQ: (P1 + P2 * 256) * $^1/_{180}$" (P1 = 0/0...F/F) (P2 = 0/0...0/9)
ESC % P1	Select Standard / User Defined Character Set P1 = 0/0 : Standard Character Set P1 = 0/1 : User Defined Character Set

Table B-5 (Cont.): Horizontal Form Handling and Printing Modes

Escape Sequence	Function
ESC & *NUL* P1 P2 P3 P4 P5 v1 .. vn	Define User Defined Characters P1 = first code table position (P1 = 0/0...P2) P2 = last code table position (P2 = P1...7/F) P3 = front space (P3 = 0/0...5/0) P4 = body length Draft: (P4 = 0/0...0/F) LQ: (P4 = 0/0...2/5) P5 = rear space (P5 = 0/0...5/0) v1 .. vn = binary data in hex (vn = 0/0...F/F)

Notes:

- This Command defines one or more characters in a RAM character table.
- All User Defined Characters are erased when the printer is switched off.
- Set the Interface Buffer to 1k or 8K (max 50 defined char in LQ, 128 in draft), or use a RAM card for up to 128 User Defined Characters in LQ.
- Set maximum every second dot to "1" in a horizontal line !
- User Defined Characters can be defined in four different print modes:

	resolution (vertical x horizontal)
Normal Size with Draft:	24 x 15
Normal Size with LQ / proport.:	24 x 37
Sub-/ Superscript with Draft:	16 x 15
Sub-/ Superscript with LQ / proport.:	16 x 37

- The characters can only be activated in the same mode as defined.
- The character layout is coded in three bytes (24 bit vertical) or two bytes (16 bit vertical) per column, top to bottom.
- To print the character change to the User Defined Character Set with ESC % .

Examlpe: vertical box, normal size with draft at code table position "41" (P3=8, P4=5, P5=8)

hex: 1B 26 00 41 41 08 05 08 FF FF FF 00 00 00 80 00 01 00 00 00 FF FF FF

Table B-5: (Cont.) Horizontal Form Handling and Printing Modes

Escape Sequence	Function
ESC (- P1 P2 P3 P4 P5	Select Line Marking P1 = 0/3 (fixed value) P2 = 0/0 (fixed value) P3 = 0/1 (fixed value) P4 = 0/1 : underline P4 = 0/2 : strike through P4 = 0/3 : overscore P5 = 0/0 : cancel score line selected by P4 P5 = 0/1 : single continuous line P5 = 0/2 : double continuous line P5 = 0/5 : single broken line P5 = 0/6 : double broken line
ESC 4	Set Italics
ESC 5	Cancel Italics
ESC <	Select Unidirectional Mode (one line)
ESC : *NUL* P1 *NUL*	Copy ROM Character Set to RAM P1 = 0/0 : S. ROMAN P1 = 0/1 : L. GOTHIC P1 = 0/2 : COURIER P1 = 0/3 : PRESTIGE P1 = 0/4 : SCRIPT P1 = 0/5 : OCR-B P1 = 0/6 : OCR-A P1 = 0/7 : ORATOR-C P1 = 0/8 : ORATOR
ESC - P1	Underline Printing P1 = 0/1 : set Underline Printing P1 = 0/0 : cancel Underline Printing
ESC D *NUL*	Clear Horizontal Tabs

Table B-5: (Cont.) Horizontal Form Handling and Printing Modes

Escape Sequence	Function
ESC D P1 P2 . . . P32 *NUL*	Set Horizontal Tabs P1 ... P32 = tab position (Pn = 0/1..F/F)
ESC E	Select Emphasized Printing (bold)
ESC F	Cancel Emphasized Printing
ESC G	Select Double Strike Printing (bold)
ESC H	Cancel Double Strike Printing
ESC M	Select Elite (12 cpi)
ESC P	Select Pica (10 cpi)
ESC Q P1	Set Right Margin (P1 = 0/3 ... F/F)
ESC S P1	Select Superscript/Subscript P1 = 0/0 or 3/0 : select Superscript P1 = 0/1 or 3/1 : select Subscript
ESC T	Cancel Superscript/Subscript
ESC U P1	Cancel/Select Unidirectional Printing P1 = 0/0 or 3/0 : cancel Unidirectional P1 = 0/1 or 3/1 : select Unidirectional
ESC W P1	Cancel/Select Double Width P1 = 0/0 or 3/0 : cancel Double Width P1 = 0/1 or 3/1 : select Double Width
ESC a P1	Select Justification P1 = 0/0 : select left justification P1 = 0/1 : center between margins P1 = 0/2 : select right justification P1 = 0/3 : select full justification

Table B-5: (Cont.) Horizontal Form Handling and Printing Modes

Escape Sequence	Function
ESC g	Select Pitch 15 cpi
ESC k P1	Select Font P1 = 0/0 : S. ROMAN P1 = 0/1 : L. GOTHIC P1 = 0/2 : COURIER P1 = 0/3 : PRESTIGE P1 = 0/4 : SCRIPT P1 = 0/5 : OCR-B P1 = 0/6 : OCR-A P1 = 0/7 : ORATOR-C P1 = 0/8 : ORATOR P1 = 1/1 : DATA LARGE
ESC ***l*** P1	Set Left Margin (P1 = 0/0...F/C)
ESC p P1	Cancel/Select Proportional P1 = 0/0 or 3/0 : cancel proportional P1 = 0/1 or 3/1 : select proportional
ESC q P1	Select Character Style P1 = 0/0 : normal style P1 = 0/1 : outline P1 = 0/2 : shadow P1 = 0/3 : outline + shadow
ESC r P1	Select Printing Colour ***)** P1 = 0/0 : Black P1 = 0/1 : Magenta P1 = 0/2 : Cyan P1 = 0/3 : Violet P1 = 0/4 : Yellow P1 = 0/5 : Red P1 = 0/6 : Green

***)** only **PRINTER TYPE 1**

Table B-5: (Cont.) Horizontal Form Handling and Printing Modes

Escape Sequence	Mnemonic	Function
ESC w P1		Cancel/Select Double Height P1 = 0/0 or 3/0 : cancel P1 = 0/1 or 3/1 : select
ESC x P1		Select Character Quality P1 = 0/0 or 3/0 : select Draft P1 = 0/1 or 3/1 : select LQ or NLQ dep. on set-up
ESC [P1 ; P2 *SP* B *Native Command,* *see also GP Emulation*	GSM	Graphic Size Modification P1 = 100 : normal height P1 = 200 : double height P1 = 300 : triple height P1 = 400 : quadruple height P1 = max. **800** in steps of 100 P2 = 100 : normal width P2 = 200 : double width P2 = 300 : triple width P2 = 400 : quadruple width P2 = max. **800** in steps of 100 Graphic Size Modification for **DATA LARGE** P1 = 100 : normal height P2 = 100 : normal width P1 and P2 max. **9 9 0 0** in steps of 100

Table B-5: (Cont.) Horizontal Form Handling and Printing Modes

Escape Sequence	Mnemonic	Function
ESC [P1 ; P2 x *Native Command,* *see also GP Emulation*	CPL	Select Font and Character Pitch (any parameter P1 or P2 may be skipped, see following alternative command sequences)
ESC [P1 x *possible format of* *Native Command CPL*		P1 selects the font: P1 = 0 or missing : Font is unchanged P1 = 1 : DATA P1 = 2 : Letter GOTHIC P1 = 3 : LETTER GOTHIC ITALIC P1 = 4 : COURIER P1 = 5 : MICRO P1 = 6 : ORATOR P1 = 7 : ORATOR-C P1 = 8 : ROMAN P1 = 9 : PRESTIGE P1 = 10 : SRIPT P1 = 11 : OCR A P1 = 12 : OCR B P1 = 13 : DATA LARGE
ESC [; P2 x *possible format of* *Native Command CPL*		P2 selects the character pitch: P2 = 0 or missing : Pitch is unchanged P2 = 1 : 10 cpi P2 = 2 : 12 cpi P2 = 3 : 15 cpi P2 = 5 : proportional P2 = 6 : 14.4 cpi P2 = 7 : 18 cpi P2 = 8 : 17.1 cpi P2 = 9 : 20 cpi

Table B-6: Graphics Modes

Escape Sequence	Function
ESC ? K P1	Reassign Graphics Mode K [1)] Standard Density, 8 dpc
ESC ? L P1	Reassign Graphics Mode L [1)] Double Density, 8 dot per column
ESC ? Y P1	Reassign Graphics Mode Y [1)] Double Density & -Speed, 8 dot per col.
ESC ? Z P1	Reassign Graphics Mode Z [1)] Quadruple Density, 8 dot per column
ESC K P2 P3 v1 . . . vn	Standard Density Graphics Mode [1)]
ESC L P2 P3 v1 . . . vn	Double Density Graphics Mode [1)]
ESC Y P2 P3 v1 . . . vn	Double Density / Double Speed Graphics Mode [1)]
ESC Z P2 P3 v1 . . . vn	Quadruple Density Graphics Mode [1)]

[1)] : for coding of P1, P2, P3 see **ESC *** on the next page

Table B-6: Graphics Modes

Escape Sequence	Function
ESC * P1 P2 P3 v1 . . . vn	Select Various Graphics Modes P2 + P3 * 256 = number of columns (0/0...F/F) v1 .. vn = binary data in hex code (0/0...F/F)

Parameter Table Graphic Density:

P1	Graphic type	dots / column	max. number of columns	hor. density (dpi)	
0/0	Standard Density (K)	8	816	60	
0/1	Double Density (L)	8	1632	120	
0/2	2xDensity / 2xSpeed (Y)	8	1632	120	*)
0/3	Quadruple Density (Z)	8	3264	240	*)
0/4	CRT I	8	1088	80	
0/6	CRT II	8	1224	90	
2/0	Standard Density	24	816	60	
2/1	Double Density	24	1632	120	
2/6	CRT III	24	1224	90	
2/7	Triple Density	24	2448	180	
2/8	Hex Density	24	4896	360	*)

*) *consecutive horizontal dots cannot be printed.*

Example: box 8x8 dots with center point 2x2 dots, standard density, 8 dots / column
hex: 1B 2A 00 08 00 FF 81 81 99 99 81 81 FF

Table B-7: Character Set Selection

Escape Sequence	Function
ESC 6	Enlarge Print Code Area (128-159 dec.)
ESC 7	Enable Upper Control Code (128-159 dec.)
ESC R P1	Select National Version P1 = 0/0 : U.S.A. P1 = 0/1 : FRANCE P1 = 0/2 : GERMANY P1 = 0/3 : U.K. P1 = 0/4 : DENMARK P1 = 0/5 : SWEDEN P1 = 0/6 : ITALY P1 = 0/7 : SPAIN P1 = 0/8 : JAPAN P1 = 0/9 : NORWAY P1 = 0/A : DENMARK 2 P1 = 0/B : SPAIN 2 P1 = 0/C : LATIN AM. P1 = 0/D : TURKEY P1 = 4/0 : LEGAL
ESC t P1	Select Character Table P1 = 0/0 : Italics Character Table P1 = 0/1 : Extended Graphics Character Table P1 = 0/2 : User Defined Character Table

Table B-8: Further GP - Control Sequences, supported by EPSON LQ Emulation Mode *(Native Commands)*

Escape Sequence	Mnemonic	Function
ESC [	$$	Control String Introducer (CSI) for ESC [
ESC	$$/	control String Introducer for ESC
ESC [< s	EJF	Eject Form
ESC [> s	IF	Insert Form
ESC [P1 *SP* X	SPQ	Select Print Quality P1 = 0: LQ P1 = 1: NLQ
ESC [P1 ; P2 *SP* r	SM #	Select Macro and Change Emulation P1 = 1: Macro 1 P1 = 2: Macro 2 P1 = 3: Macro 3 P1 = 4: Macro 4 P2 = 0: no change of emulation P2 = 1: EPSON Emulation P2 = 2: IBM ProPrinter Emulation P2 = 3: IBM ProPrinter AGM Emulation P2 = 4: EPSON Emulation

Table B-8 (Cont.): Further GP - Control Sequences, supported by EPSON LQ Emulation Mode *(Native Commands)*

Escape Sequence	Mnemonic	Function
ESC [P1 ; P2 w	SNVCT	Set National Version and Code Table P1 = 1 - 15 national version depending on selected character set (see Appendix C Char. Set Tables) P2 = 3 digit code of the code table (see command SCT) P1 for national version **EPSON EXT. GCT**: P1 = 1 : U.S.A P1 = 2 : France P1 = 3 : Germany P1 = 4 : U.K. P1 = 5 : Denmark P1 = 6 : Sweden P1 = 7 : Italy P1 = 8 : Spain P1 = 9 : Japan P1 = 1 0 : Norway P1 = 1 1 : Denmark 2 P1 = 1 2 : Spain 2 P1 = 1 3 : Latin AM P1 = 1 4 : Turkey P1 = 1 5 : Legal P1 for **IBM CODE PAGE:** P1 = 1 : CP 437 P1 = 2 : CP 850 P1 = 3 : CP 860 P1 = 4 : CP 863 P1 = 5 : CP 865 P1 = 6 : CP 858 P1 for **CODE PAGE EE**: P1 = 1 : CP 437 GK P1 = 2 : CP 851 GK P1 = 3 : CP 928 GK P1 = 4 : CP 855 CYRI P1 = 5 : CP 866 P1 = 6 : CP 869 P1 = 7 : CP 852 P1 = 8 : KAMENICKY P1 = 9 : ISO LATIN 2 P1 = 1 0 : MAZOVIA P1 = 1 1 : CP 437 HUN P1 = 1 2 : CP 852 SEE P1 = 1 3 : CP 866 LAT P1 = 1 4 : WIN LAT2
ESC [; P2 w	SCT	Set Code Table P2 = 3 bit code of the code table P2 = 0 6 1 : IBM Set 1 P2 = 0 6 2 : IBM Set 2 P2 = 0 6 3 : IBM Code Page P2 = 0 7 1 : EPSON Ext. G. C. T P2 = 1 0 0 : CODE PAGES EE

Table B-8 (Cont.): Further GP - Control Sequences, supported by EPSON LQ Emulation Mode *(Native Commands)*

Escape Sequence	Mnemonic	Function
ESC [; P2 ; P3 ; P4 ; P5 ; P6 ; P7 *SP* z *see Appendix G* *BARCODE Programming*	BH	Barcode Header P2: Barcode type P3: Height of barcode P4: Width of the thin bars P5: Width of the thin gaps P6: Ratio width to thin (bars / gaps) P7: Uni-directional or bi-directional printing 0 : or not programmed: means no changes 1 : uni-directional printing in LQ 2 : bi-directional printing in LQ 3 : uni-directional printing in NLQ 4 : bi-directional printing in NLQ
	Note:	A switch from uni-directional to bi-directional printing is only possible if the parameter **UNI-DIRECT.CMD** is set to **YES** via operator panel or ESC-sequence.
ESC [? 0 h	SMBC	Set Mode Barcode
ESC [? 0 ***l***	RSBC	Reset Mode Barcode

Table 9: ESC / P2 Commands

Escape Sequence	Function
ESC (c P1 P2 P3 P4 P5	**Set page format** Sets top and bottom margins in the defined units. P1 = 04 00 tm = P2 + P3 x 256 tm: top margin in units tm bm = P4 + P5 x 256 bm: bottom margin in units bm
ESC (C P1 P2 P3	**Set page length in defined unit** Define page length in units P1 = 02 00 pl = P2 + P3 x 256
ESC (V P1 P2 P3	**Set absolute vertical print position** Define absolute vertical print position in units P1 = 02 00 avpp = P2 + P3 x 256 avpp: define print position from top margin in defined units
ESC (v P1 P2 P3	**Set relative vertical print position** Define relative vertical print position in units P1 = 02 00 rvpp = P2 + P3 x 256 rvpp: moves the print position in defined units.

Table 9: (Cont.) ESC / P2 Commands

Escape Sequence	Function
ESC X P1 P2 P3	**Select font by pitch and point** P1 = 0 : No change in pitch P1 = 1 : Selects proportional spacing P1 = 18, 24, 30, 36, 42, 48, 60 or 72 Selects fixed pitch equal to 360/m cpi pz = P2 + P3 x 256 pz: Point size in 0,5 points; 1 point equals 1/72 inch pz = 0: No change in point size pz = 16, 20, 21, 24, 28, 32, 36, 40, 42, 44, 48, 52, 56, 60, 64
ESC (U P1 P2	**Set unit** P1 = 01 00 P2 = 10, 20, 30, 40, 50, 60 /3600" P2 = 10; Standard
ESC c P1 P2	**Set horizontal motion index (HMI)** Define HMI-Index Change pitch value in n/360"-steps HMI = P1 + P2 x 256 HMI max. 3 inch

Table 9: (Cont.) ESC / P2 Commands

Escape Sequence	Function
ESC (t n1 n2 Pn P1 P2	**Assign character table** n1 = 3, n2 = 0 Pn = Parameter of ESC t : 0, 1, 2, 3, "0", "1", "2" or "3" P1 P2 = character table 0 0 : italic 1 0 : PC 437 (USA) 3 0 : PC 850 (Multilingual) 7 0 : PC 860 (Portugal) 8 0 : PC 863 (French-Canada) 9 0 : PC 865 (Norway) 44 0 : PC 858 (Multilingual + Euro) The character table assigned by Pn is one of the four tables which will be selected by the ESC t command.
ESC t Pn	**Select character table** Selects the character table to be used for printing from among the four character tables which are assigned by ESC (t command. Pn = 0/0 or 3/0 : Character Table 0 Pn = 0/1 or 3/1 : Character Table 1 Pn = 0/2 or 3/2 : Character Table 2 Re-maps downloaded Characters from the positions 0 to 127 to the positions 128 to 255. Pn = 0/3 or 3/3 : Character Table 3 **Default Setting** Pn = 0/0 or 3/0 : Italics Character Table Pn = 0/1 or 3/1 : CP 437 Pn = 0/2 or 3/2 : User Defined Character Table Pn = 0/3 or 3/3 : CP 437

Table 9: (Cont.) ESC / P2 Commands

Escape Sequence	Function
ESC (^ P1 P2	**Print data as characters** Prints n data bytes as characters, not control codes pd = P1 + P2 x 256
ESC (G P1 P2	**Select graphics mode** P1 = 01 00 P2 = 1 or 49 Graphics mode may be reset by ESC @.
ESC . P1 P2 P 3 P4 P5 P6	**Print raster graphics** P1 = 0 : graphics mode non compressed P1 = 1 : graphics mode compressed P2 = 10, 20 : vertical resolution in 3600/v DPI P3 = 10, 20 : horizontal resolution in 3600/h DPI P4 : vertical dot count (rows of dot graphics) 1 < P4 < 24 hzd : horizont dot count (columns of dot graphics) hzd = P5 + P6 x 256 Combination P2 = 10, P3 = 20 is not possible.

Hex Code	Format	Page
00	Null	F-3
08	Backspace	F-3
09	Horizontal Tab	F-3
0A	Line Feed	F-3
0B	Vertical Tab	F-3
0C	Form Feed	F-3
0D	Cariage Return	F-3
11	Select Printer	F-3
12	Cancel Condensed Mode	F-3
13	Deselect Printer	F-3
14	Cancel Double Width	F-3
18	Cancel Buffer	F-3
1B	Escape	F-3
20	Space	F-3
7F	Delete	F-3
1B 0E or 0E	Select Double Width for One Line	F-3/7
1B 0F or 0F	Select Condensed Mode	F-3/7
1B 23	Cancel Most Significant Bit Control	F-3
1B 30	Set Line Space to $^1/_8$ "	F-4
1B 32	Set Line Space to $^1/_6$ "	F-4
1B 34	Set Italics	F-9
1B 35	Cancel Italics	F-9
1B 36	Enlarge Print Code Area	F-16
1B 37	Enable Upper Control Code Area	F-16
1B 3C	Select Unidirectional Mode (one line)	F-9
1B 3D	Set Most Significant Bit to 0	F-3
1B 3E	Set Most Significant Bit to 1	F-3
1B 40	Initialize Printer	F-3
1B 45	Select Emphasized (bold)	F-10
1B 46	Cancel Emphasized	F-10

Hex Code	Format	Page
1B 47	Select Double Strike (bold)	F-10
1B 48	Cancel Double Strike	F-10
1B 4D	Select Elite (12 cpi)	F-10
1B 4F	Cancel Automatic Perforation Skip	F-4
1B 50	Select Pica (10 cpi)	F-10
1B 54	Cancel Superscript/Subscript	F-10
1B 67	Select Pitch 15 cpi	F-11
24 24	Control String Introducer for ESC [	F-17
24 24 2F	Control String Introducer for ESC	F-17
1B 19 P_1	Formfeed and ASF Control	F-5
1B 20 P_1	Select Intercharacter Space	F-7
1B 21 P_1	Select Multible Print Mode	F-7
1B 25 00 / 1B 25 01	Select Standard- / User Defined Char. Set	F-7
1B 2B P_1	Set line Space to $^{P1}/_{360}$ "	F-4
1B 2F P_1	Select Variable Tab Channel	F-4
1B 2D 01 / 1B 2D 00	Select / Cancel Underline	F-9
1B 33 P_1	Set Line Space to $^{P1}/_{180}$ "	F-4
1B 41 P_1	Set line Space to $^{P1}/_{60}$ "	F-4
1B 42 00	Clear Vertical Tabs	F-4
1B 43 P_1	Set Form Length in Lines	F-4
1B 44 00	Clear Horizontal Tabs	F-9
1B 4A P_1	Perform $^{P1}/_{180}$ Line Feed	F-4
1B 4E P_1	Set Automatic Perforation Skip	F-4
1B 51 P_1	Set Right Margin	F-10
1B 52 P_1	Set National Version	F-16
1B 53 00 / 1B 53 01	Select Superscript / Subscript	F-10
1B 55 00 / 1B 55 01	Cancel / Select Unidirectional Printing	F-10
1B 57 00 / 1B 57 01	Cancel / Select Double Width	F-10
1B 61 P_1	Select Justification	F-10

Hex Code	Format	Page
1B 6A P_1	Perform $^{P1}/_{180}$ Reverse Line Feed	F-4
1B 6B P_1	Select Font	F-11
1B 6C P_1	Set Left Margin	F-11
1B 70 00 / 1B 70 01	Cancel / Select Proportional	F-11
1B 71 P_1	Select Character Style	F-11
1B 72 P_1	Select Printing Colour	F-11
1B 74 P_1	Select Character Table	F-16 F-22
1B 77 00 / 1B 77 01	Cancel / Select Double Height	F-12
1B 78 P_1	Select Character Quality	F-12
1B 24 P_1 P_2	Set Absolute Horizontal Position	F-7
1B 26 00 P_1 P_2 P_3 P_4 P_5 data	Define User Defined Characters	F-8
1B 28 2D P_1 P_2 P_3 P_4 P_5	Select Line Marking	F-9
1B 28 43 P_1 P_2 P_3	Set Page Length in defined Unit	F-20
1B 28 47 P_1 P_2	Select Graphics Mode	F-23
1B 28 55 P_1 P_2	Set Unit	F-21
1B 28 56 P_1 P_2 P_3	Set absolute vertical Print Position	F-20
1B 28 63 P_1 P_2 P_3 P_4 P_5	Set Page Format	F-20
1B 28 74 P_1 P_2 P_3 P_4	Assign Character Table	F-22
1B 28 76 P_1 P_2 P_3	Set relative vertical Print Position	F-20
1B 28 5E P_1 P_2	Print Data as Character	F-23
1B 2A P_1 P_2 P_3 data	Select Various Graphics Modes	F-15
1B 2E P_1 P_2 P_3 P_4 P_5 P_6	Print Raster Graphics	F-23
1B 3A 00 P_1 00	Copy ROM Character Set to RAM	F-9
1B 3F 4B P_1	Reassign Graphics Mode K	F-14
1B 3F 4C P_1	Reassign Graphics Mode L	F-14
1B 3F 59 P_1	Reassign Graphics Mode Y	F-14
1B 3F 5A P_1	Reassign Graphics Mode Z	F-14
1B 42 P_1....P_{16} 00	Set Vertical Tabs	F-4
1B 43 00 P_1	Set Form Length in Inches	F-4

Hex Code	Format	Page
1B 44 P_1 P_2...P_{32} 00	Set Horizontal Tabs	F-10
1B 4B P_2 P_3 data	Standard Density Graphics Mode	F-14
1B 4C P_2 P_3 data	Double Density Graphics Mode	F-14
1B 58 P_1 P_2 P_3	Select Font by Pitch and Point	F-21
1B 59 P_2 P_3 data	Double Speed & Double Density Graph. Mode	F-14
1B 5A P_2 P_3 data	Quadruple Density Graphics Mode	F-14
1B 5B 3B P_2 73	AGC / PCC Procedure	F-5
1B 5B 3B P_2 77	Set Code Table	F-18
1B 5B 3B P_2 3B P_3 3B P_4 3B P_5 3B P_6 3B P_7 20 7A	Barcode Printing	F-19
1B 5B 3C 73	Eject Form	F-17
1B 5B 3E 73	Insert Form	F-17
1B 5B 3E P_1 3B P_2 3B P_3 3B P_4 73	Select Paper Source and Insert Form	F-5
1B 5B 3F 30 68	Set Mode Barcode	F-19
1B 5B 3F 30 6C	Reset Mode Barcode	F-19
1B 5B P_1 20 58	Select Print Quality	F-17
1B 5B P_1 3B P_2 20 72	Select Makro and Change Emulation	F-17
1B 5B P_1 3B P_2 20 42	Graphic Size Modification	F-12
1B 5B P_1 3B P_2 77	Set National Version and Code Table	F-18
1B 5B P_1 3B P_2 78	Select Font and Character Pitch	F-13
1B 5B P_1 77	Set National Version	F-18
1B 5C P_1 P_2	Set Relative Horizontal Position	F-7
1B 62 P_1 00	Clear Vertical Tabs in Channel P_1	F-4
1B 62 m P_1 P_2...P_9 00	Set Vertical Tab in Channel P_1	F-4
1B 63 P_1 P_2	Set Horizontal Motion Index (HMI)	F-21

Hex - Decimal Conversion Table

	0	1	2	3	4	5	6	7	8	9	A	B	C	D	E	F
0	0	16	32	48	64	80	96	112	128	144	160	176	192	208	224	240
1	1	17	33	49	65	81	97	113	129	145	161	177	193	209	225	241
2	2	18	34	50	66	82	98	114	130	146	162	178	194	210	226	242
3	3	19	35	51	67	83	99	115	131	147	163	179	195	211	227	243
4	4	20	36	52	68	84	100	116	132	148	164	180	196	212	228	244
5	5	21	37	53	69	85	101	117	133	149	165	181	197	213	229	245
6	6	22	38	54	70	86	102	118	134	150	166	182	198	214	230	246
7	7	23	39	55	71	87	103	119	135	151	167	183	199	215	231	247
8	8	24	40	56	72	88	104	120	136	152	168	184	200	216	232	248
9	9	25	41	57	73	89	105	121	137	153	269	185	201	217	233	249
A	10	26	42	58	74	90	106	122	138	154	170	186	202	218	234	250
B	11	27	43	59	75	91	107	123	139	155	171	187	203	219	235	251
C	12	28	44	60	76	92	108	124	140	156	172	188	204	220	236	252
D	13	29	45	61	77	93	109	125	141	157	173	189	205	221	237	253
E	14	30	46	62	78	94	110	126	142	158	174	190	206	222	238	254
F	15	31	47	63	79	95	111	127	143	159	175	191	207	223	239	255

Appendix G Barcode Quick Reference

1. Introduction

The barcode print facility is available in all three emulations.

2. Programming

There are three escape sequences to print barcodes

- The first sequence is to define the Barcode Header. The type of barcode as well as all parameters are selected by a header. The header does not affect any parameters outside the barcode application and remains valid until another header is transmitted or the printer is turned off. This can be done at any time but before barcode printing.

  The header has the following format:

  ESC [; P_2 ; P_3 ; P_4 ; P_5 ; P_6 ; P_7 ␣ z ***Note:*** ␣ = Space

- In step two, the ESC-sequence "Set Mode Barcode (SMBC)" starts the barcode printing.

  ESC [? 0 h

- Finally, the ESC-sequence "Reset Mode Barcode (RMBC)" will stop printing.

  ESC [? 0 /

Note: Between **SMBC** and **RMBC** are only printable characters tolerated (no CR or LF).

2.1 Barcode Header

Format	Function/Parameter	Hex Code
BH	Barcode Header P_2 = Barcode type; P_3 = Height of barcode; P_4 = Width of thin bars; P_5 = Width of thin gaps; P_6 = Ratio width to height; P_7 = Uni/Bidirectional printing	1B 5B 3B P_2 3B P_3 3B P_4 3B P_5 3B P_6 3B P_7 20 7A
SMBC	Start of Barcode	1B 5B 3F 30 68
RMBC	Stop Barcode	1B 5B 3F 30 6C

Barcode Header Parameters

P_2 Barcode type

- default = **101 (**Code 39 horizontal)

Type	horizontal	horizontal + human readable text	vertical	vertical + human readable text
Code 39	101	201	301	401
2 of 5 industrial	102	202	302	402
2 or 5 interleaved	103	203	303	403
Codabar (Monarch)	104	204	304	404
EAN 8	105	205	not applicable	not applicable
EAN 13	106	206	not applicable	not applicable
Code 93	107	207	307	407
MSI Mod 10/10	108	208	308	408
UPC-E	109	209	not applicable	not applicable
UPC-A	110	210	not applicable	not applicable
Code 128 (EAN 128)	111	211	311	411
Postnet	112	not applicable	not applicable	not applicable
KIX Code	113	not applicable	not applicable	not applicable

P_3 Height of barcode

- default: $^3/_{12}$" - 0.64 cm

All characters in a line are automatically repeated according to the selected barcode height. This is also true for plain text!

- $P_3 * {}^1/_{12}$"
- possible values from:
  0 to 40 (30_H to 34_H30_H) or (48_D to 52_D48_D) for vertical barcodes
  0 to 99 (30_H to 39_H39_H) or (48_D to 57_D57_D) for horizontal barcodes

Barcode	Height in % of barcode length	minimum height in mm
Code 39	25	20 (0.8")
Codabar	25	20 (0.8")
Code 93	15	6.25 (0.25")
Code 128	15	6.25 (0.25")

P_4 Width of the thin bars (default: $^2/_{144}$" = 0.35 mm)

Note: The width of bars and gaps should be equal. For this, the parameters **P_4** and **P_5** should not deviate more than one step.

for horizontal Barcode

P_4	hex	dec	inch	mm
0	30	48	2/144	0,35
1	31	49	3/144	0,53
2	32	50	4/144	0,70
3	33	51	5/144	0,88
4	34	52	6/144	1,05
5	35	53	7/144	1,23
6	36	54	8/144	1,41
7	37	55	9/144	1,58

for vertical Barcode

P_4	hex	dec	inch	mm
0	30	48	2/180	0,28
1	31	49	3/180	0,42
2	32	50	4/180	0,56
3	33	51	5/180	0,70
4	34	52	6/180	0,85
5	35	53	7/180	0,99
6	36	54	8/180	1,12
7	37	55	9/180	1,27

P_5 Width of the thin gaps (default: $^2/_{144}$" = 0.35 mm)

The values are the same as in **P_4**

P_6 Ratio Width to Thin (default: **0** (2 to 1))

P_6 value	Code 39 2 of 5 industrial 2 of 5 interleaved Codabar Code 93 MSI mod 10/10 Code 128	EAN 8 EAN 13 UPC-A UPC-E
0	2.0 to 1	SC3
1	2.5 to 1	SC6
2	3.0 to 1	SC9
3	3.5 to 1	SC3

Note: Code 93, MSI 10/10, Code 128 are fixed 2.0 to 1
Best results for Code 39, 2 of 5 industrial, 2 of 5 interleaved, and Codabar with 2.5 to 1

P_7 Uni-directional or bi-directional printing - standard 0 uni-directional

values are:
0 or not programmed means no changes
1 uni-directional printing in LQ
2 bi-directional printing in LQ
3 uni-directional printing in NLQ
4 bi-directional printing in NLQ

Note: A switch from uni-directional to bi-directional printing is only possible if the parameter **UNI-DIRECT.CMD** is set to **YES** via operator panel or ESC-sequence.

Start Position of Barcode Printing

The start position for barcode printing is the current print position.
For both horizontal and vertical printing, the print position after printing barcodes is the same line as the start position next to the barcode printed.

2.2 Barcode Programming Examples

Note: All examples are coded in standard uni-directional printing - that means the parameter "P_7" is not used.
In the following examples, ␣ stands for "Space".
The small square ▮ before and after the printed barcode indicates the actual print position.
Between **Start Barcode** and **Stop Barcode** are only printable characters tolerated (no CR or LF).

Barcode Example for Code 39

Barcode Header:	**ESC [; P_2 ; P_3 ; P_4 ; P_5 ; P_6 ; P_7 ␣ z**
	ESC [; 201 ; 8 ; 1 ; 1 ; 1 ; ␣ z
Start Barcode:	**ESC [? 0 h**
Data:	*** C ␣ O ␣ D ␣ E ␣ ␣ ␣ 3 9 ***
Stop Barcode:	**ESC [? 0 /**

Barcode Example for 2 of 5 Industrial

Barcode Header:	**ESC [; P_2 ; P_3 ; P_4 ; P_5 ; P_6 ; P_7 ␣ z**
	ESC [; 202 ; 8 ; 1 ; 1 ; 1 ; ␣ z
Start Barcode:	**ESC [? 0 h**
Data:	**: 1 2 3 4 5 6 7 8 9 0 ;**
Stop Barcode:	**ESC [? 0 /**

Barcode Example for 2 of 5 Interleaved

Barcode Header:	**ESC [; P_2 ; P_3 ; P_4 ; P_5 ; P_6 ; P_7 ␣ z**
	ESC [; 203 ; 8 ; 1 ; 1 ; 1 ; ␣ z
Start Barcode:	**ESC [? 0 h**
Data:	**: 1 2 3 4 5 6 7 8 9 0 ;**
Stop Barcode:	**ESC [? 0 /**

Barcode Example for Codabar (Monarch)

Barcode Header:	**ESC [; P_2 ; P_3 ; P_4 ; P_5 ; P_6 ; P_7 ␣ z**
	ESC [; 204 ; 8 ; 1 ; 1 ; 1 ; ␣ z
Start Barcode:	**ESC [? 0 h**
Data:	**a 0 1 2 3 4 5 6 7 8 9 t**
Stop Barcode:	**ESC [? 0 /**

Barcode Example for EAN 8

Barcode Header:	ESC [; P_2 ; P_3 ; P_4 ; P_5 ; P_6 ; P_7 ␣ z
	ESC [; 205 ; 8 ; ; ; 1 ; ␣ z
Start Barcode:	ESC [? 0 h
Data:	4 0 1 2 3 4 5 5
Stop Barcode:	ESC [? 0 /

Barcode Example for EAN 8 ADD-2

Barcode Header:	ESC [; P_2 ; P_3 ; P_4 ; P_5 ; P_6 ; P_7 ␣ z
	ESC [; 205 ; 8 ; ; ; 1 ; ␣ z
Start Barcode:	ESC [? 0 h
Data:	4 0 1 2 3 4 5 5 1 2
Stop Barcode:	ESC [? 0 /

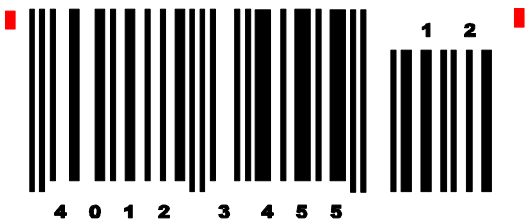

Barcode Example for EAN 8 ADD-5

Barcode Header:	ESC [; P_2 ; P_3 ; P_4 ; P_5 ; P_6 ; P_7 ␣ z
	ESC [; 205 ; 8 ; ; ; 1 ; ␣ z
Start Barcode:	ESC [? 0 h
Data:	4 0 1 2 3 4 5 5 8 6 1 0 4
Stop Barcode:	ESC [? 0 /

Barcode Example for EAN 13

Barcode Header:	ESC [; P_2 ; P_3 ; P_4 ; P_5 ; P_6 ; P_7 ␣ z
	ESC [; 206 ; 8 ; ; ; 1 ; ␣ z
Start Barcode:	ESC [? 0 h
Data:	4 1 2 3 4 5 6 7 8 9 0 1 8
Stop Barcode:	ESC [? 0 /

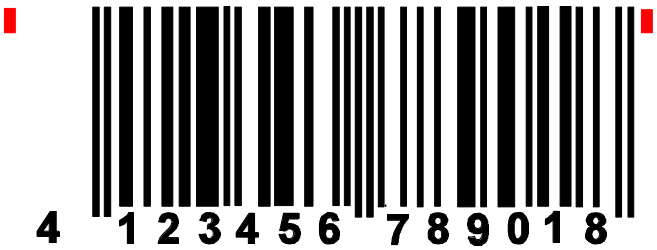

Barcode Example for EAN 13 ADD-2

Barcode Header:	ESC [; P_2 ; P_3 ; P_4 ; P_5 ; P_6 ; P_7 ␣ z
	ESC [; 206 ; 8 ; ; ; 1 ; ␣ z
Start Barcode:	ESC [? 0 h
Data:	4 1 2 3 4 5 6 7 8 9 0 1 8 1 2
Stop Barcode:	ESC [? 0 /

Barcode Example for EAN 13 ADD-5

Barcode Header:	ESC [; P_2 ; P_3 ; P_4 ; P_5 ; P_6 ; P_7 ␣ z
	ESC [; 206 ; 8 ; ; ; 1 ; ␣ z
Start Barcode:	ESC [? 0 h
Data:	4 1 2 3 4 5 6 7 8 9 0 1 8 8 6 1 0 4
Stop Barcode:	ESC [? 0 /

Barcode Example for Code 93

Barcode Header:	ESC [; P_2 ; P_3 ; P_4 ; P_5 ; P_6 ; P_7 ␣ z
	ESC [; 207 ; 8 ; 1 ; 1 ; ; ␣ z
Start Barcode:	ESC [? 0 h
Data:	a C + O + D + E ␣ 9 3 W I e
Stop Barcode:	ESC [? 0 /

Barcode Example for MSI Mod 10/10

Barcode Header:	ESC [; P_2 ; P_3 ; P_4 ; P_5 ; P_6 ; P_7 ␣ z
	ESC [; 208 ; 8 ; 1 ; 1 ; ; ␣ z
Start Barcode:	ESC [? 0 h
Data:	: 1 2 3 4 5 6 7 4 1 ;
Stop Barcode:	ESC [? 0 /

Barcode Example for UPC-E

Barcode Header:	ESC [; P_2 ; P_3 ; P_4 ; P_5 ; P_6 ; P_7 ␣ z
	ESC [; 209 ; 8 ; ; ; 1 ; ␣ z
Start Barcode:	ESC [? 0 h
Data:	0 1 2 3 4 5 6 5
Stop Barcode:	ESC [? 0 /

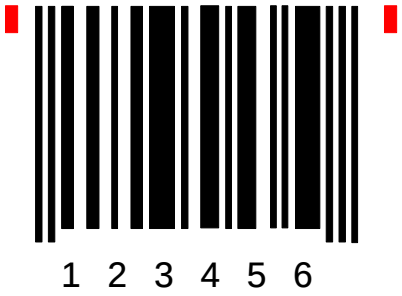

Barcode Example for UPC-E ADD-2

Barcode Header:	ESC [; P_2 ; P_3 ; P_4 ; P_5 ; P_6 ; P_7 ␣ z
	ESC [; 209 ; 8 ; ; ; 1 ; ␣ z
Start Barcode:	ESC [? 0 h
Data:	0 1 2 3 4 5 6 5 1 2
Stop Barcode:	ESC [? 0 /

Barcode Example for UPC-E ADD-5

Barcode Header:	ESC [; P_2 ; P_3 ; P_4 ; P_5 ; P_6 ; P_7 ␣ z
	ESC [; 209 ; 8 ; ; ; 1 ; ␣ z
Start Barcode:	ESC [? 0 h
Data:	0 1 2 3 4 5 6 5 8 6 1 0 4
Stop Barcode:	ESC [? 0 /

Barcode Example for UPC-A

Barcode Header:	ESC [; P_2 ; P_3 ; P_4 ; P_5 ; P_6 ; P_7 ␣ z
	ESC [; 210 ; 8 ; ; ; 1 ; ␣ z
Start Barcode:	ESC [? 0 h
Data:	0 1 2 3 4 5 6 7 8 9 0 5
Stop Barcode:	ESC [? 0 /

Barcode Example for UPC-A ADD-2

Barcode Header:	ESC [; P_2 ; P_3 ; P_4 ; P_5 ; P_6 ; P_7 ␣ z
	ESC [; 210 ; 8 ; ; ; 1 ; ␣ z
Start Barcode:	ESC [? 0 h
Data:	0 1 2 3 4 5 6 7 8 9 0 5 1 2
Stop Barcode:	ESC [? 0 /

Barcode Example for UPC-A ADD-5

Barcode Header:	ESC [; P_2 ; P_3 ; P_4 ; P_5 ; P_6 ; P_7 ␣ z
	ESC [; 210 ; 8 ; ; ; 1 ; ␣ z
Start Barcode:	ESC [? 0 h
Data:	0 1 2 3 4 5 6 7 8 9 0 5 8 6 1 0 4
Stop Barcode:	ESC [? 0 /

Barcode Example for Code 128

Barcode Header:	ESC [; P_2 ; P_3 ; P_4 ; P_5 ; P_6 ; P_7 ␣ z
	ESC [; 211 ; 8 ; 1 ; 1 ; ; ␣ z
Start Barcode:	ESC [? 0 h
Data:	C o d e ␣ 1 2 8
Stop Barcode:	ESC [? 0 /

Barcode Example for Code 128 using FNC1 = Coding] C 1

Barcode Header:	ESC [; P_2 ; P_3 ; P_4 ; P_5 ; P_6 ; P_7 ␣ z
	ESC [; 211 ; 8 ; 1 ; 1 ; ; ␣ z
Start Barcode:	ESC [? 0 h
Data:	] C 1 0 0 3 4 0 1 2 3 4 5 1 2 3 4 5 6 7 8 9 5
Stop Barcode:	ESC [? 0 /

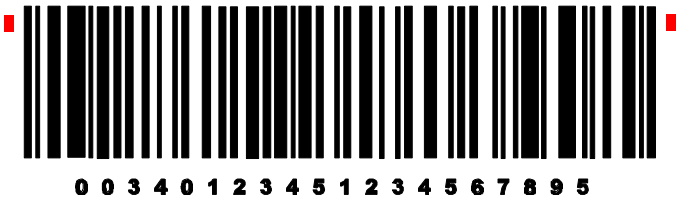

Barcode Example for POSTNET

Barcode Header:	**ESC [; P_2 ; P_3 ; P_4 ; P_5 ; P_6 ; P_7 ␣ z**
	ESC [; 112 ; ; ; ; ; ␣ z
Start Barcode:	**ESC [? 0 h**
Data:	**1 2 3 4 5 6 7 8 9 0 1**
Stop Barcode:	**ESC [? 0 /**
Data:	**CR LF LF**
	Mark Pollan CR LF
	101 Main St CR LF
	Anytown US 12345-6789

```
Mark Pollan
101 main St
Anytown US 12345-6789
```

Barcode Example for KIX - PTT, Post Nederland

Barcode Header:	**ESC [; P_2 ; P_3 ; P_4 ; P_5 ; P_6 ; P_7 ␣ z**
	ESC [; 113 ; ; ; ; ; ␣ z
Start Barcode:	**ESC [? 0 h**
Data:	**1 2 3 4 5 6 7 8 9 0**
Stop Barcode:	**ESC [? 0 /**

Programming two Barcodes symbols on the same line

Barcode Header:	**ESC [; P_2 ; P_3 ; P_4 ; P_5 ; P_6 ; P_7 ␣ z**
	ESC [; 201 ; 7 ; 0 ; 0 ; 1 ; ␣ z
Start Barcode:	**ESC [? 0 h**
Data:	*** C ␣ O ␣ D ␣ E ␣ ␣ ␣ 3 9 ***
Stop Barcode:	**ESC [? 0 /**
Blank zone	␣ ␣ ␣
Start Barcode:	**ESC [? 0 h**
Data:	*** C ␣ O ␣ D ␣ E ␣ ␣ ␣ 3 9 ***
Stop Barcode:	**ESC [? 0 /**

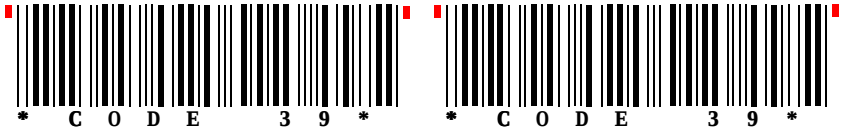

Programming two Barcodes symbols separated by CR and LF

Barcode Header:	ESC [; P_2 ; P_3 ; P_4 ; P_5 ; P_6 ; P_7 ␣ z
	ESC [; 201 ; 7 ; 0 ; 0 ; 1 ; ␣ z
Start Barcode:	ESC [? 0 h
Data:	* C ␣ O ␣ D ␣ E ␣ ␣ ␣ 3 9 *
Stop Barcode:	ESC [? 0 /
Blank zone:	CR LF LF LF LF LF LF LF
Start Barcode:	ESC [? 0 h
Data:	* C ␣ O ␣ D ␣ E ␣ ␣ ␣ 3 9 *
Stop Barcode:	ESC [? 0 /

Programming two Barcodes symbols in landscape on the same line

Barcode Header:	ESC [; P_2 ; P_3 ; P_4 ; P_5 ; P_6 ; P_7 ␣ z
	ESC [; 401 ; 7 ; 0 ; 0 ; 1 ; ␣ z
Start Barcode:	ESC [? 0 h
Data:	* C ␣ O ␣ D ␣ E ␣ ␣ ␣ 3 9 *
Stop Barcode:	ESC [? 0 /
Blank zone:	␣ ␣ ␣
Start Barcode:	ESC [? 0 h
Data:	* C ␣ O ␣ D ␣ E ␣ ␣ ␣ 3 9 *
Stop Barcode:	ESC [? 0 /

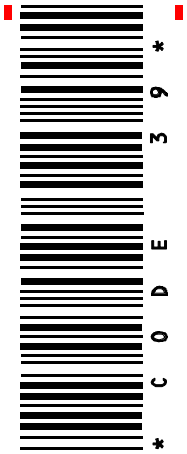

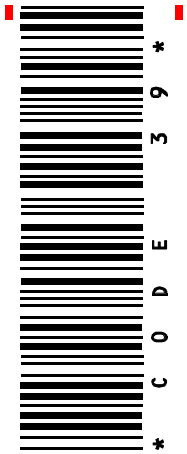

Programming two Barcodes symbols in landscape separated by CR / LF

Barcode Header:	**ESC [; P_2 ; P_3 ; P_4 ; P_5 ; P_6 ; P_7 ␣ z**
	ESC [; 401 ; 7 ; 0 ; 0 ; 1 ; ␣ z
Start Barcode:	**ESC [? 0 h**
Data:	*** C ␣ O ␣ D ␣ E ␣ ␣ ␣ 3 9 ***
Stop Barcode:	**ESC [? 0 /**
Blank zone:	**CR LF LF LF LF LF LF LF LF LF LF LF LF**
Start Barcode:	**ESC [? 0 h**
Data:	*** C ␣ O ␣ D ␣ E ␣ ␣ ␣ 3 9 ***
Stop Barcode:	**ESC [? 0 /**

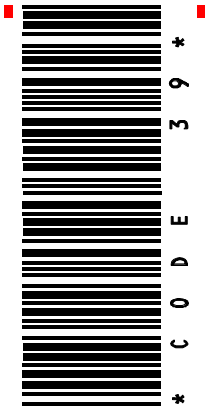

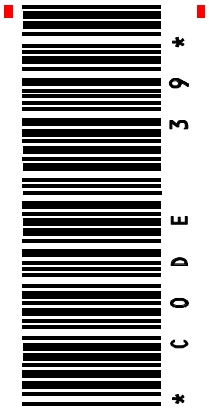

Reset off Menu Access

To reactivate the menu access function, perform the following steps:

- Switch off the printer. Press the **MENU** and **START/STOP** keys simultaneously. While holding down the two keys, switch on the printer. When the message **MENU ACCESS** is displayed, release the keys. Now you are able to change the menu access function. If the new setting is supposed to be permanent, don't forget the **SAVE** function.