2 Parts and diagrams

- Order parts, accessories, and supplies
- Orderable parts
- Whole unit replacement (WUR)
- Service parts
- Related documentation and software
- How to use the parts lists and diagrams
- Scanner and document feeder main assembly
- Covers
- Internal assemblies
- Accessories
- Alphabetical parts list
- Numerical parts list

Order parts, accessories, and supplies

- **Replacement parts:** www.hp.com/go/hpparts/. Outside
- **Supplies and accessories:** www.hp.com/go/ljsupplies. To order www.hp.com/ghp/buyonline.html www.hp.com/support/lj400colorMFPM476.

Orderable parts

Accessories

The following list of accessories was current at the time of printing. Ordering information and availability of

Table 2-1 Accessories

Item	Description	Part number
Paper-handling accessories	Optional Tray 3 feeder assembly main body (includes paper cassette)	CE863-67901
	250-sheet paper cassette (optional Tray 3)	RM1-8544-000
Cable	2-meter A-to-B USB cable	

Toner cartridges

Table 2-2 Toner cartridges

Description	Cartridge number	Part number (service)
High-capacity black toner cartridge with HP ColorSphere toner	CF380X	CF380-67901
Standard-capacity black toner cartridge with HP ColorSphere toner	CF380A	CF380-67902
Cyan toner cartridge with HP ColorSphere toner	CF381A	CF381-67901
Yellow toner cartridge with HP ColorSphere toner	CF382A	CF382-67901
Magenta toner cartridge with HP ColorSphere toner	CF383A	

NOTE: www.hp.com/go/pageyield. Actual yield

Customer self repair (CSR) and service kits

Table 2-3 Customer self repair (CSR) and service kits

Description	Part number
Cover, DIMM	RC4-2852-000
Paper cassette (Tray 2)	RM2-5469-000
250-sheet paper cassette (optional Tray 3)	RM1-8544-000
Optional Tray 3 feeder assembly main body (includes paper cassette)	CE863-67901
2-meter A-to-B USB cable	

Whole unit replacement (WUR)

Table 2-4 Pro 400 Color MFP M476 nw

Description	Part number
Prod-Replacement 110V M476nw WUR BR	CF385-67019
Prod-Replacement 220V M476nw WUR CN/MY	CF385-67023
Prod-Exchange 220V M476nw WUR EMEA	CF385-69001
Prod-Exchange 110V M476nw WUR NAR/TW	CF385-69002
Prod-Exchange 220V M476nw WUR AP	CF385-69003
Prod-Exchange 220V M476nw WUR LAR	

Table 2-5 Pro 400 Color MFP M476 dn

Description	Part number
Prod-Exchange 220V M476dn WUR EMEA	CF386-69001
Prod-Exchange 110V M476dn WUR NAR	

Table 2-6 Pro 400 Color MFP M476 dw

Description	Part number
Prod-Replacement 220V M476dw WUR CN/MY	CF387-67022
Prod-Replacement 110V M476dw WUR BR	CF387-67023
Prod-Exchange 220V M476dw WUR EMEA	CF387-69001
Prod-Exchange 110V M476dw WUR NAR/TW	CF387-69002
Prod-Exchange 220V M476dw WUR AP	CF387-69003
Prod-Exchange 220V M476dw WUR LAR	

Service parts

Table 2-7 Service parts

Description	Part number
Assy-Control Panel NFC (M476dw)	CF387-60114
Assy-Control Panel Non-NFC (M476nw, M476dn)	

Related documentation and software

Table 2-8 Related documentation and software

Item	Description	Part number
HP Color LaserJet Pro MFP M476 User Guide	Product user guide.	CF385-90907
HP Color LaserJet Pro MFP M476 Repair Manual	English service manual (this manual)	

How to use the parts lists and diagrams

The figures in this chapter show the major subassemblies in the product and their component parts. A parts list table follows each exploded view assembly diagram. Each table lists the item number, the associated part number, and the description of each part. If a part is not listed in the table, then it is not a field replacement unit (FRU).

CAUTION: Be sure to order the correct part. When looking for part numbers for electrical components, pay careful attention to the voltage that is listed in the description column. Doing so will ensure that the part number selected is for the correct all-in-one model.

NOTE: In this manual, the abbreviation “PCA” stands for “printed circuit-board assembly.” Components described as a PCA might consist of a single circuit board or a circuit board plus other parts, such as cables and sensors.

Scanner and document feeder main assembly

Figure 2-1 Scanner and document feeder main assembly

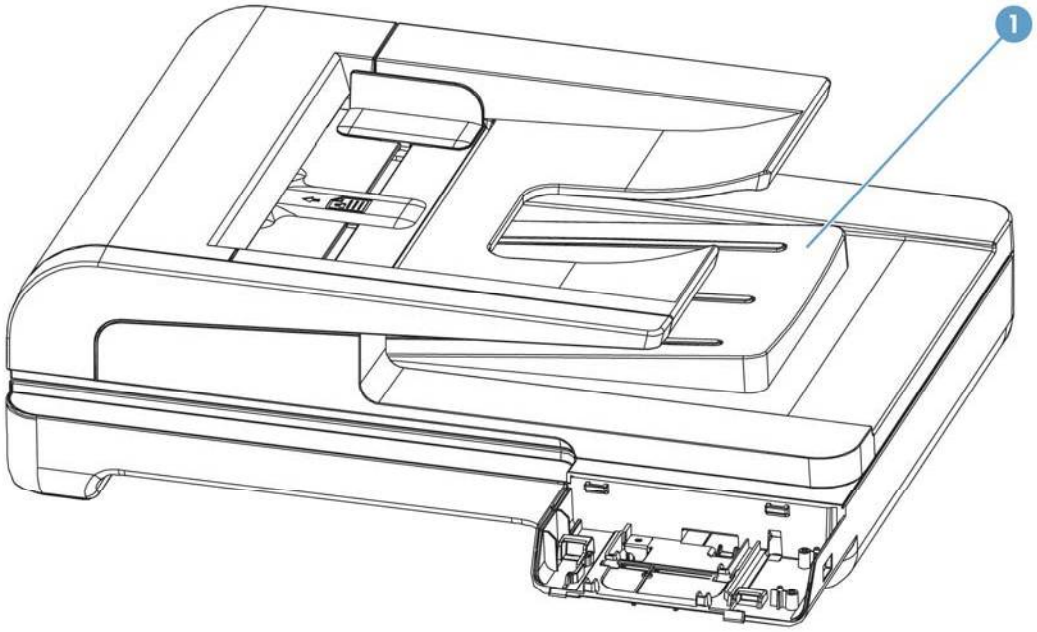

Table 2-9 Scanner and document feeder main assembly

Ref	Description	Part number	Qty
1	Scanner assembly/ADF	CF387-60106	

Covers

Figure 2-2

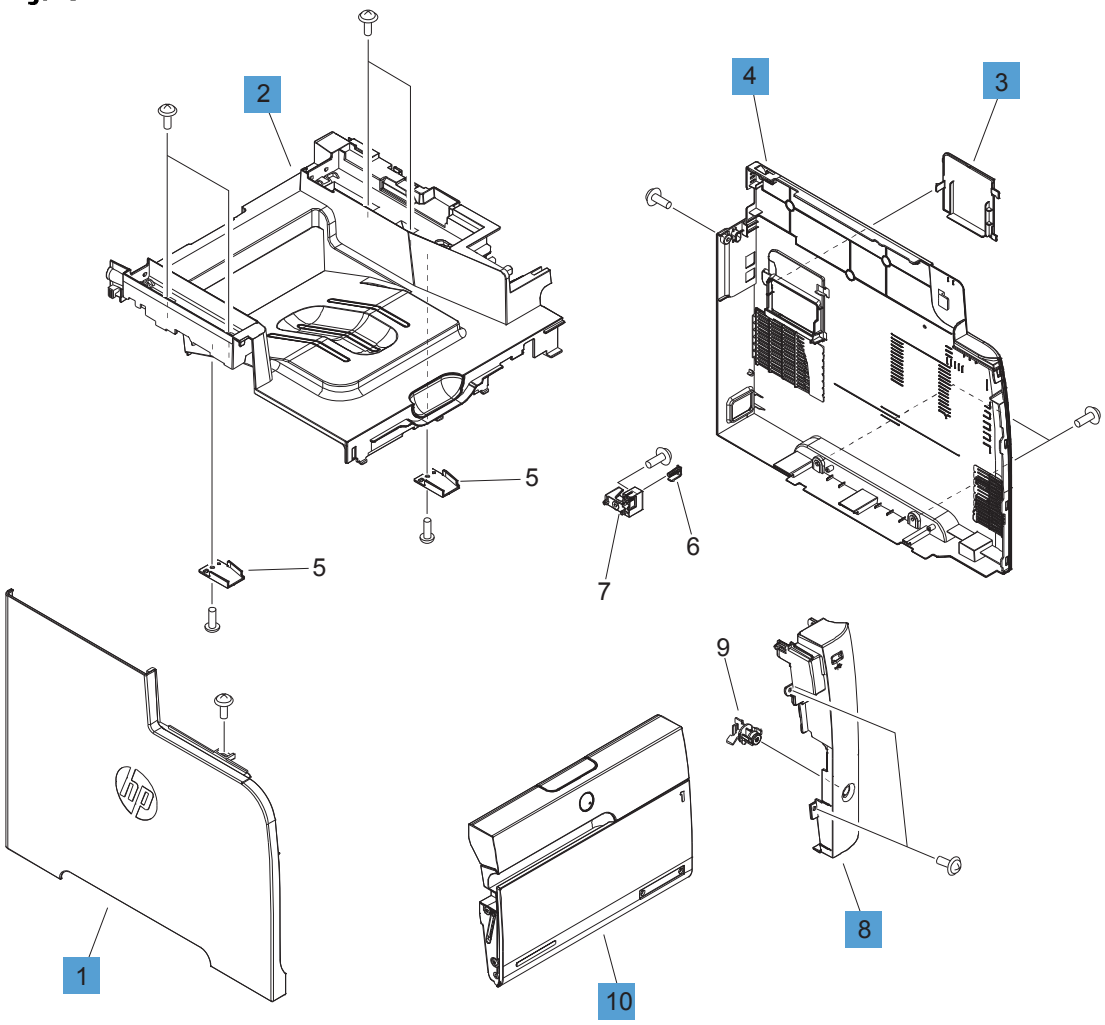

Table 2-10 Covers

Ref	Description	Part number	Qty
1	Cover, left	RL1-3063-000	1
2	Cover, top assembly	RM2-5300-000	1
3	Cover, DIMM	RC4-2852-000	1
4	Cover, right	RC4-2855-000	1
8	Cover, right front	RC4-2860-000	1
10	Door, front assembly	RM2-5301-000	

Internal assemblies

Internal assemblies (1 of 7)

Figure 2-3

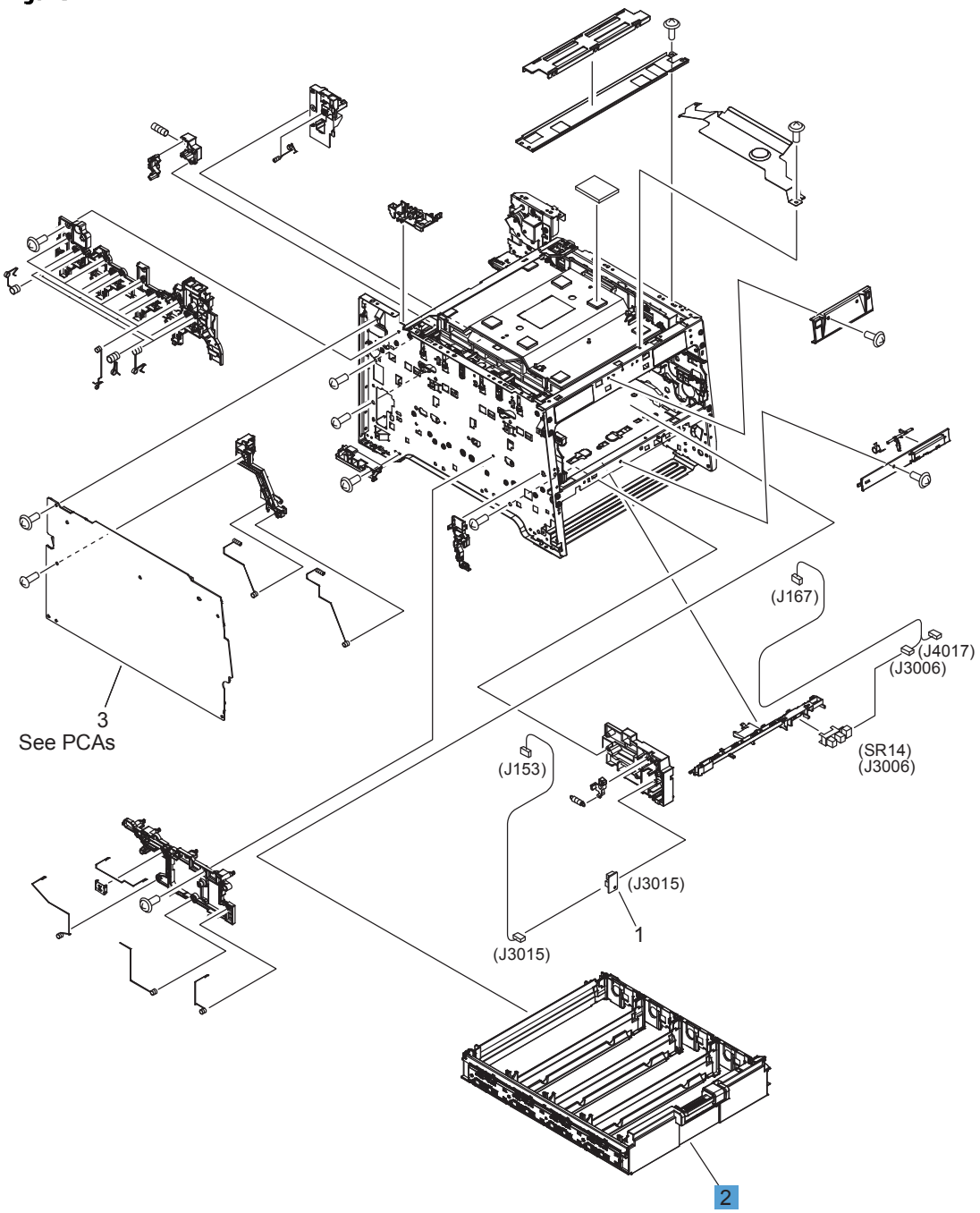

Table 2-11 Internal assemblies (1 of 7)

Ref	Description	Part number	Qty
2	Cartridge-tray assembly	RM2-5299-000	

Internal assemblies (2 of 7)

Figure 2-4

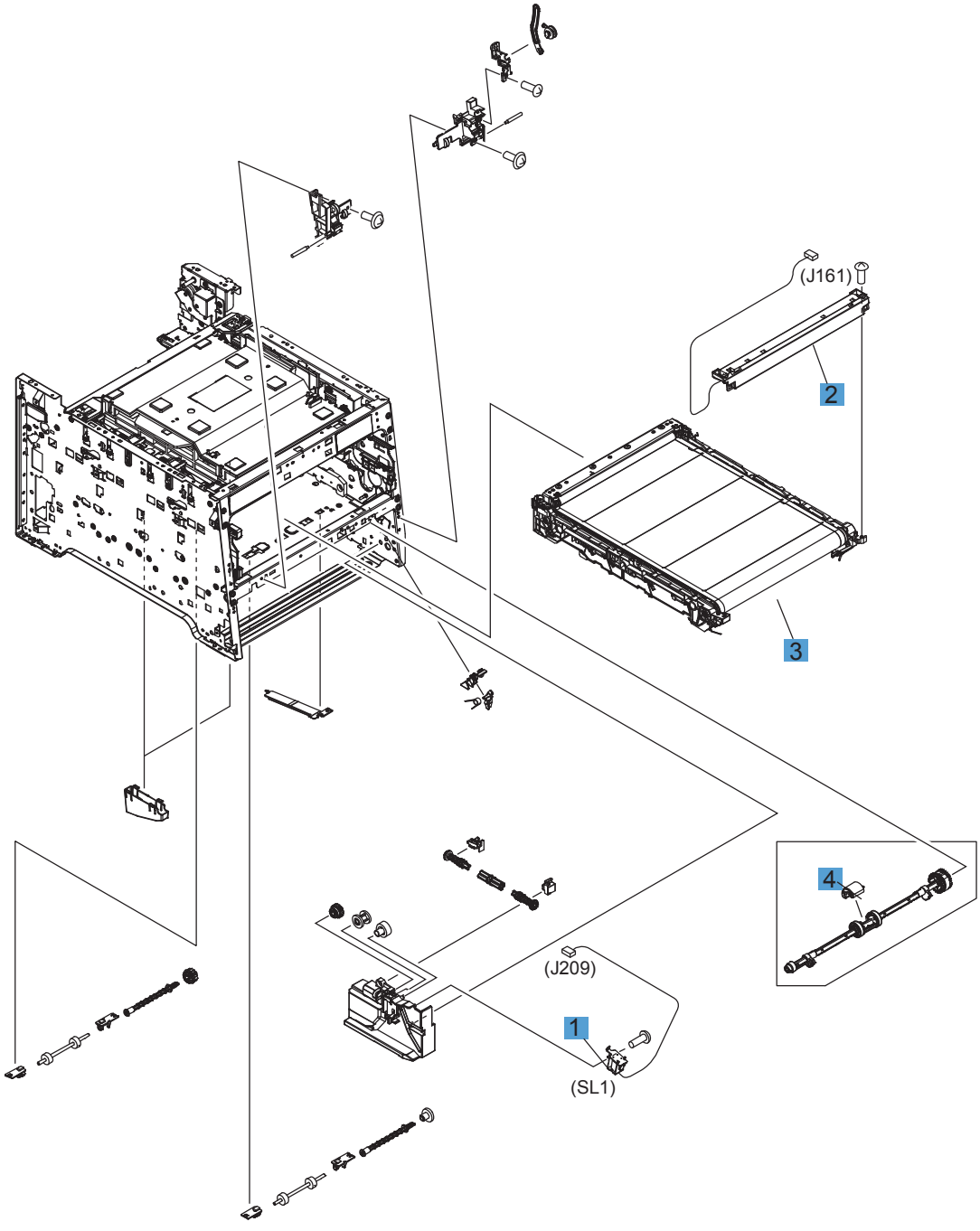

Table 2-12 Internal assemblies (2 of 7)

Ref	Description	Part number	Qty
1	Solenoid, Tray 1 (MP)	RM1-5420-000	1
2	Color misregistration sensor assembly	RM1-8029-000	1
3	Intermediate transfer belt (ITB)	RM2-0192-000	1
4	Roller, paper-pickup Tray 1	RL1-1802-000	

Internal assemblies (3 of 7)

Figure 2-5

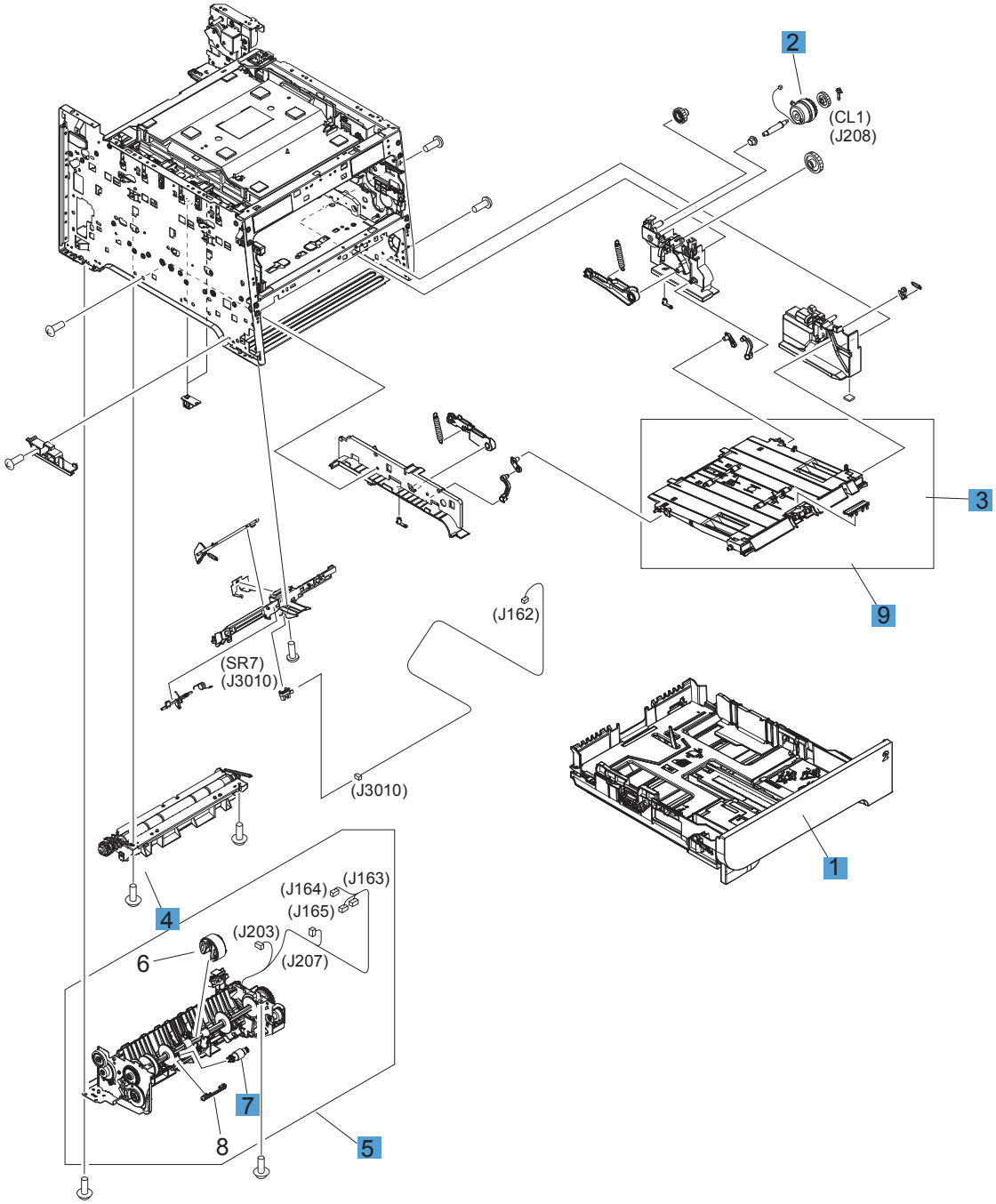

Table 2-13 Internal assemblies (3 of 7)

Ref	Description	Part number	Qty
1	Cassette, Tray 2	RM2-5469-000	1
2	Multi purpose clutch assembly	RM1-8318-000	1
3	Pad, separation Tray 1	RL1-1785-000	1
4	Registration assembly	RM1-4841-000	1
5	Paper pickup assembly	RM1-8045-000	1
6	Tray 2 paper pickup roller assembly	RM1-8047-000	1
7	Tray 2 separation roller assembly	RM1-4840-000	1
9	Multi purpose tray assembly	RM1-8610-000	

Internal assemblies (4 of 7)

Figure 2-6

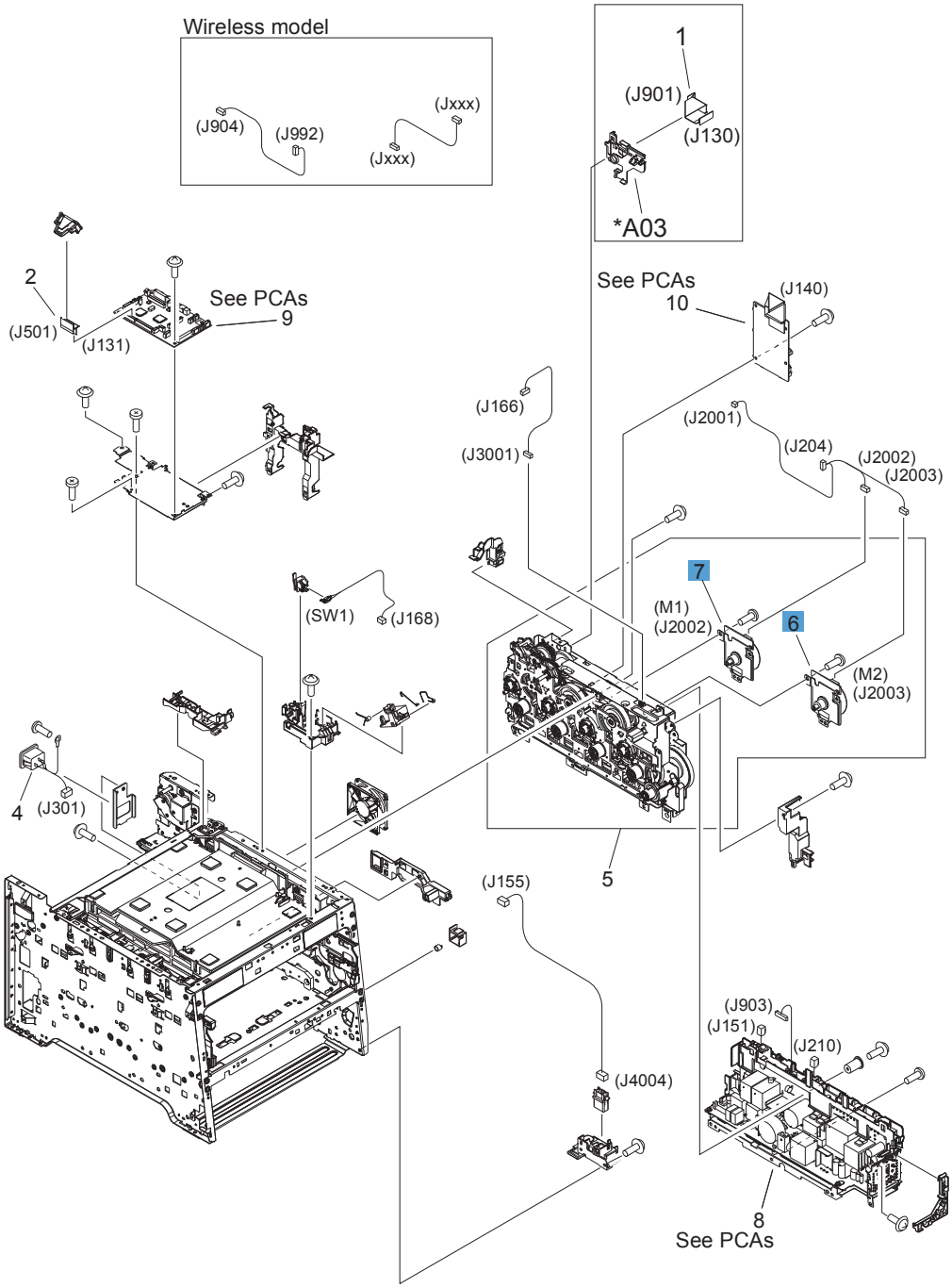

Table 2-14 Internal assemblies (4 of 7)

Ref	Description	Part number	Qty
6	Motor, developer DC (M1)	RL1-3053-000	1
7	Motor, drum DC (M2)	RL1-1800-000	1
8	Fan	RK2-3847-000	

Internal assemblies (5 of 7)

Figure 2-7

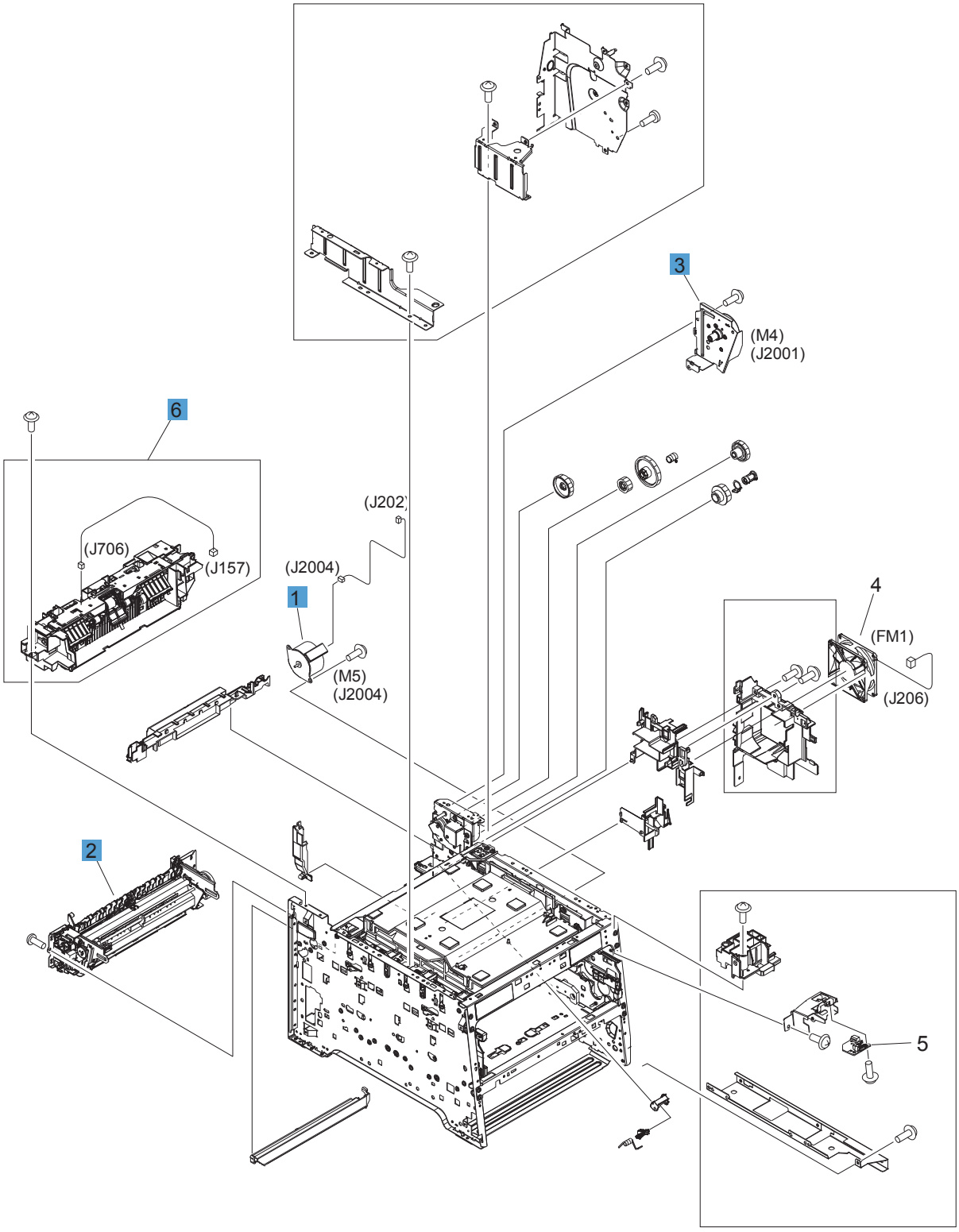

Table 2-15 Internal assemblies (5 of 7)

Ref	Description	Part number	Qty
1	Feed motor assembly	RM1-5419-000	1
2	Fixing assembly (110v)	RM2-5476-000	1
2	Fixing assembly (220v)	RM2-5478-000	1
3	Fixing motor assembly	RM1-8609-000	1
6	Paper delivery assembly	RM1-8049-000	

Internal assemblies (6 of 7)

Figure 2-8

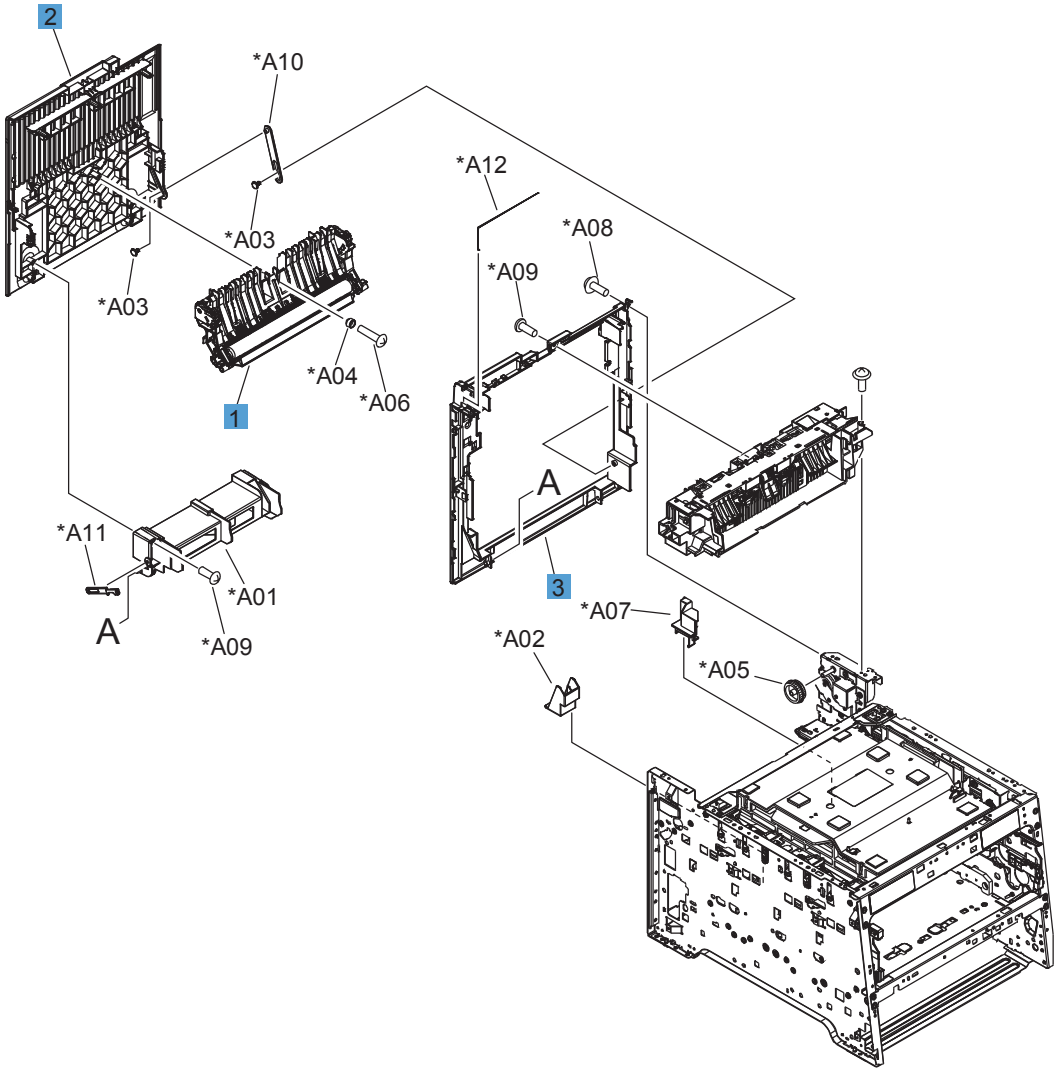

Table 2-16 Internal assemblies (6 of 7)

Ref	Description	Part number	Qty
1	Paper feed guide assembly (simplex model; includes transfer roller)	RM1-8043-000	1
2	Door, rear (simplex model)	RC3-1665-000	1
3	Cover, rear (simplex model)	RL1-3072-000	

Internal assemblies (7 of 7)

Figure 2-9

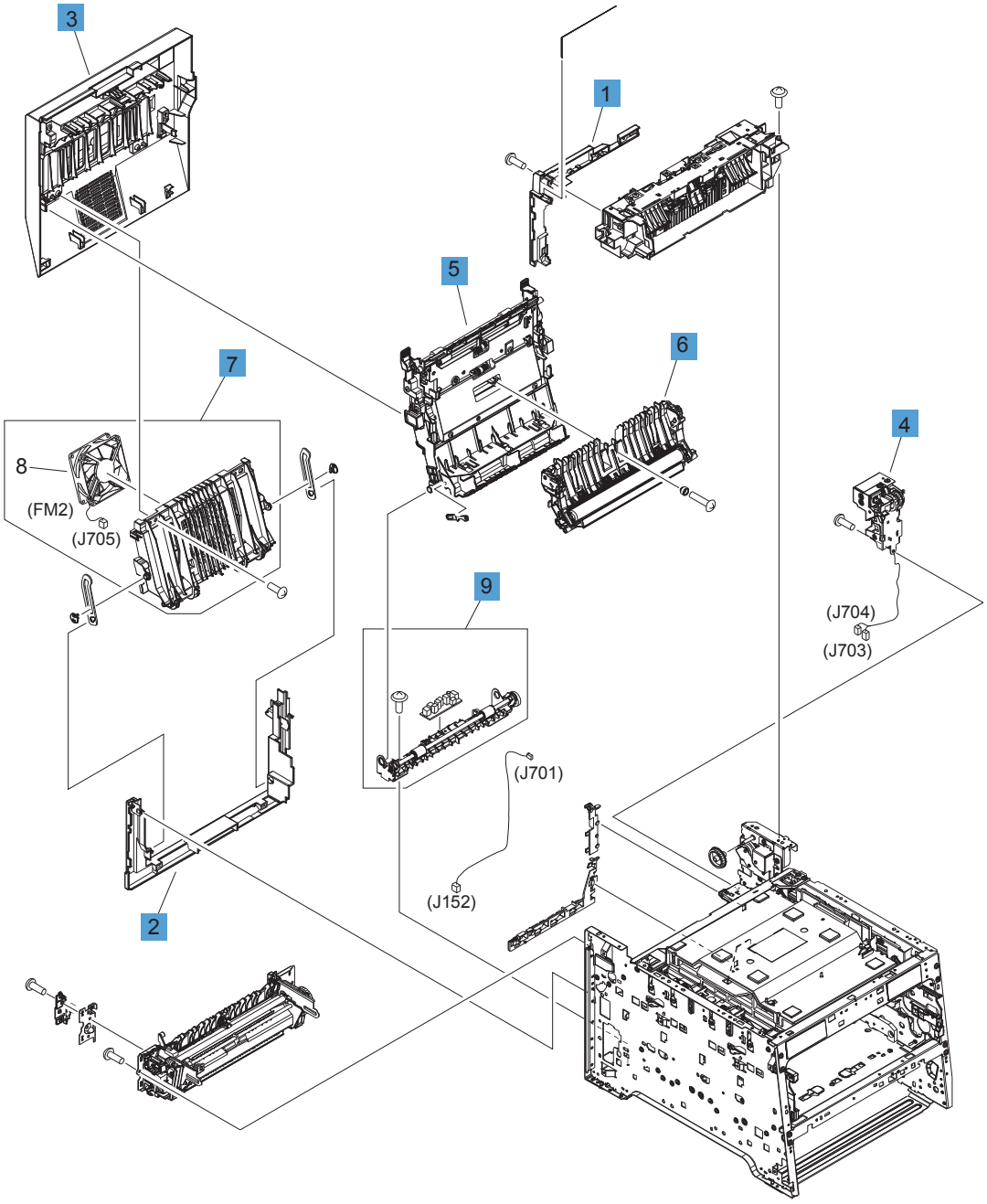

Table 2-17 Internal assemblies (7 of 7)

Ref	Description	Part number	Qty
1	Cover, upper-rear	RL1-3068-000	1
2	Cover, lower-rear	RC3-1700-000	1
3	Door, rear	RM1-8052-000	1
4	Reverse drive assembly	RM1-4880-000	1
5	Feed guide, duplex assembly (includes transfer roller)[1]	RM1-4879-000	1
6	Paper feed guide assembly (includes transfer roller)	RM1-8043-000	1
7	Rib assembly, rear-door	RM1-8053-000	1
9	Paper-pickup guide assembly	RM1-8051-000	

[1] For a broken link-guide: you must replace either the duplexing-feed guide assembly, or the entire product (the interior paper guide is not replaceable).

PCAs

Figure 2-10

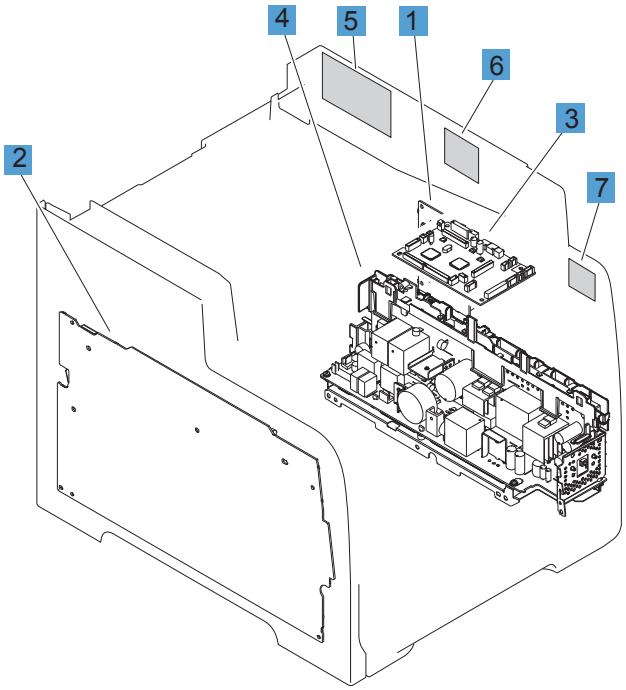

Table 2-18 PCAs

Ref	Description	Part number	Qty
1	Driver PCA	RM1-8032-000	1
2	High-voltage power supply	RM1-8031-000	1
3	DC controller	RM2-8028-000	1
4	Low-voltage power supply (110v)	RM2-8030-000	1
4	Low-voltage power supply (220v)	RM2-8032-000	1
5	Fax PCA (US only)	CF206-60001	1
5	Fax PCA (Europe only)	CF207-60001	1
5	Fax PCA (Brazil only)	CF208-60001	1
6	Wireless controller PCA	1150-7951	1
Not shown	Formatter PCA M476 nw	CF385-60001	1
Not shown	Formatter PCA M476 dn	CF386-60002	1
Not shown	Formatter PCA M476 dw	CF387-60004	1
Not shown	Formatter PCA M476 nw (China only)	CF385-60002	1
Not shown	Formatter PCA M476 dn (China only)	CF386-60003	1
Not shown	Formatter PCA M476 dw (China only)	CF387-60005	

Accessories

250-sheet paper feeder accessory kit (optional Tray 3)

Figure 2-11

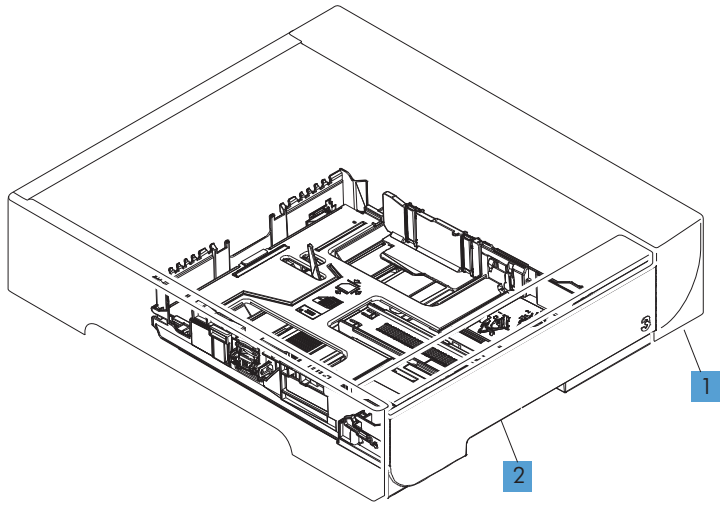

Table 2-19 250-sheet paper feeder accessory kit (optional Tray 3)

Ref	Description	Part number	Qty
1	Tray 3 feeder assembly main body (includes paper cassette)	CE863–67901	1
2	Tray 3 paper cassette only	RM1-8544-000	

Alphabetical parts list

Table 2-20 Alphabetical parts list

Description	Part number	Table and page
Cartridge-tray assembly		Internal assemblies (1 of 7) on page 119
Cassette, Tray 2		Internal assemblies (3 of 7) on page 123
Color misregistration sensor assembly		Internal assemblies (2 of 7) on page 121
Cover, DIMM		Covers on page 117
Cover, left		Covers on page 117
Cover, lower-rear		Internal assemblies (7 of 7) on page 131
Cover, rear (simplex model)		Internal assemblies (6 of 7) on page 129
Cover, right		Covers on page 117
Cover, right front		Covers on page 117
Cover, top assembly		Covers on page 117
Cover, upper-rear		Internal assemblies (7 of 7) on page 131
DC controller		PCAs on page 133
Door, front assembly		Covers on page 117
Door, rear		Internal assemblies (7 of 7) on page 131
Door, rear (simplex model)		Internal assemblies (6 of 7) on page 129
Driver PCA		PCAs on page 133
Fan		Internal assemblies (4 of 7) on page 125
Fax PCA (Brazil only)		PCAs on page 133
Fax PCA (Europe only)		PCAs on page 133
Fax PCA (US only)		PCAs on page 133
Feed guide, duplex assembly (includes transfer roller)[1]		Internal assemblies (7 of 7) on page 131
Feed motor assembly		Internal assemblies (5 of 7) on page 127
Fixing assembly (110v)		Internal assemblies (5 of 7) on page 127
Fixing assembly (220v)		Internal assemblies (5 of 7) on page 127

Table 2-20 Alphabetical parts list (continued)

Description	Part number	Table and page
Fixing motor assembly		Internal assemblies (5 of 7) on page 127
Formatter PCA M476 dn		PCAs on page 133
Formatter PCA M476 dn (China only)		PCAs on page 133
Formatter PCA M476 dw		PCAs on page 133
Formatter PCA M476 dw (China only)		PCAs on page 133
Formatter PCA M476 nw		PCAs on page 133
Formatter PCA M476 nw (China only)		PCAs on page 133
High-voltage power supply		PCAs on page 133
Intermediate transfer belt (ITB)		Internal assemblies (2 of 7) on page 121
Low-voltage power supply (110v)		PCAs on page 133
Low-voltage power supply (220v)		PCAs on page 133
Motor, developer DC (M1)		Internal assemblies (4 of 7) on page 125
Motor, drum DC (M2)		Internal assemblies (4 of 7) on page 125
Multi purpose clutch assembly		Internal assemblies (3 of 7) on page 123
Multi purpose tray assembly		Internal assemblies (3 of 7) on page 123
Pad, separation Tray 1		Internal assemblies (3 of 7) on page 123
Paper delivery assembly		Internal assemblies (5 of 7) on page 127
Paper feed guide assembly (includes transfer roller)		Internal assemblies (7 of 7) on page 131
Paper feed guide assembly (simplex model; includes transfer roller)		Internal assemblies (6 of 7) on page 129
Paper pickup assembly		Internal assemblies (3 of 7) on page 123
Paper-pickup guide assembly		Internal assemblies (7 of 7) on page 131
Registration assembly		Internal assemblies (3 of 7) on page 123
Reverse drive assembly		Internal assemblies (7 of 7) on page 131
Rib assembly, rear-door		Internal assemblies (7 of 7) on page 131
Roller, paper-pickup Tray 1		Internal assemblies (2 of 7) on page 121

Table 2-20 Alphabetical parts list (continued)

Description	Part number	Table and page
Scanner assembly/ADF		Scanner and document feeder main assembly on page 115
Solenoid, Tray 1 (MP)		Internal assemblies (2 of 7) on page 121
Tray 2 paper pickup roller assembly		Internal assemblies (3 of 7) on page 123
Tray 2 separation roller assembly		Internal assemblies (3 of 7) on page 123
Tray 3 feeder assembly main body (includes paper cassette)		250-sheet paper feeder accessory kit (optional Tray 3) on page 135
Tray 3 paper cassette only		250-sheet paper feeder accessory kit (optional Tray 3) on page 135
Wireless controller PCA		PCAs on page 133

Numerical parts list

Table 2-21 Numerical parts list

Part number	Description	Table and page
1150-7951		PCAs on page 133
CE863–67901		250-sheet paper feeder accessory kit (optional Tray 3) on page 135
CF206-60001		PCAs on page 133
CF207-60001		PCAs on page 133
CF208-60001		PCAs on page 133
CF385-60001		PCAs on page 133
CF385-60002		PCAs on page 133
CF386-60002		PCAs on page 133
CF386-60003		PCAs on page 133
CF387-60004		PCAs on page 133
CF387-60005		PCAs on page 133
CF387-60106		Scanner and document feeder main assembly on page 115
RC3-1665-000		Internal assemblies (6 of 7) on page 129
RC3-1700-000		Internal assemblies (7 of 7) on page 131
RC4-2852-000		Covers on page 117
RC4-2855-000		Covers on page 117
RC4-2860-000		Covers on page 117
RK2-3847-000		Internal assemblies (4 of 7) on page 125
RL1-1785-000		Internal assemblies (3 of 7) on page 123
RL1-1800-000		Internal assemblies (4 of 7) on page 125
RL1-1802-000		Internal assemblies (2 of 7) on page 121
RL1-3053-000		Internal assemblies (4 of 7) on page 125
RL1-3063-000		Covers on page 117
RL1-3068-000		Internal assemblies (7 of 7) on page 131
RL1-3072-000		Internal assemblies (6 of 7) on page 129

Table 2-21 Numerical parts list (continued)

Part number	Description	Table and page
RM1-4840-000		Internal assemblies (3 of 7) on page 123
RM1-4841-000		Internal assemblies (3 of 7) on page 123
RM1-4879-000	Feed guide, duplex assembly (includes transfer roller)	Internal assemblies (7 of 7) on page 131
RM1-4880-000		Internal assemblies (7 of 7) on page 131
RM1-5419-000		Internal assemblies (5 of 7) on page 127
RM1-5420-000		Internal assemblies (2 of 7) on page 121
RM1-8029-000		Internal assemblies (2 of 7) on page 121
RM1-8031-000		PCAs on page 133
RM1-8032-000		PCAs on page 133
RM1-8043-000		Internal assemblies (6 of 7) on page 129
RM1-8043-000		Internal assemblies (7 of 7) on page 131
RM1-8045-000		Internal assemblies (3 of 7) on page 123
RM1-8047-000		Internal assemblies (3 of 7) on page 123
RM1-8049-000		Internal assemblies (5 of 7) on page 127
RM1-8051-000		Internal assemblies (7 of 7) on page 131
RM1-8052-000		Internal assemblies (7 of 7) on page 131
RM1-8053-000		Internal assemblies (7 of 7) on page 131
RM1-8318-000		Internal assemblies (3 of 7) on page 123
RM1-8544-000		250-sheet paper feeder accessory kit (optional Tray 3) on page 135
RM1-8609-000		Internal assemblies (5 of 7) on page 127
RM1-8610-000		Internal assemblies (3 of 7) on page 123
RM2-0192-000		Internal assemblies (2 of 7) on page 121

Table 2-21 Numerical parts list (continued)

Part number	Description	Table and page
RM2-5299-000		Internal assemblies (1 of 7) on page 119
RM2-5300-000		Covers on page 117
RM2-5301-000		Covers on page 117
RM2-5469-000		Internal assemblies (3 of 7) on page 123
RM2-5476-000		Internal assemblies (5 of 7) on page 127
RM2-5478-000		Internal assemblies (5 of 7) on page 127
RM2-8028-000		PCAs on page 133
RM2-8030-000		PCAs on page 133
RM2-8032-000		PCAs on page 133